CLASSIC 3-HOLE CONCEALED BASIN MIXER

PRODUCT INFORMATION

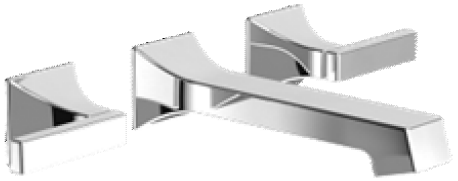

Model	TVW10111011061
Collection	Classic
Colours	Chrome
Max flow	5 l/min
Projection of spout	184 mm
Push Pop-up waste	1 1/4" included
Red/Blue indexing	Lever
Aerator	Smart Lime Cleaning (SLC) Pressure Compensating (PCA) M24 x 1 – male thread

PRODUCT FEATURE

Aqua Smart — Villeroy & Boch

Water saving through aerators
Water flow is regulated to 5 L/min

Easy Clean — Villeroy & Boch

The taps and shower heads are easily cleaned by the rubber on the aerator and nozzle.

Air Plus — Villeroy & Boch

Incorporates air into the aerator, to provide the same feeling of water flow but with reduced water consumption

Smart Pressure — Villeroy & Boch

Constant water flow rate regardless of pressure fluctuations in the piping system.
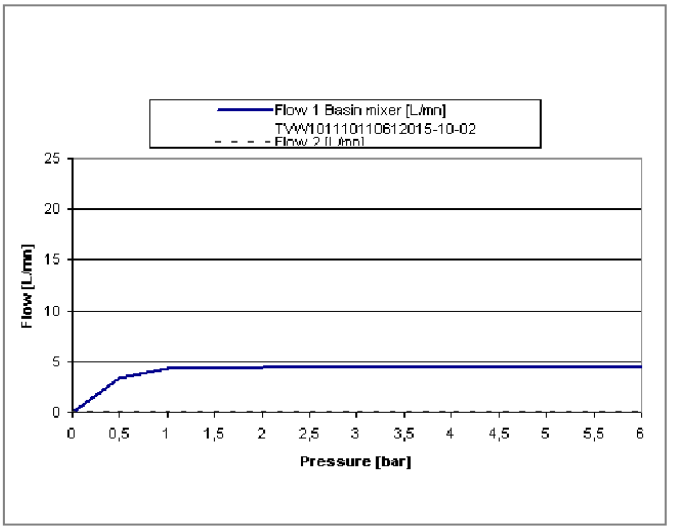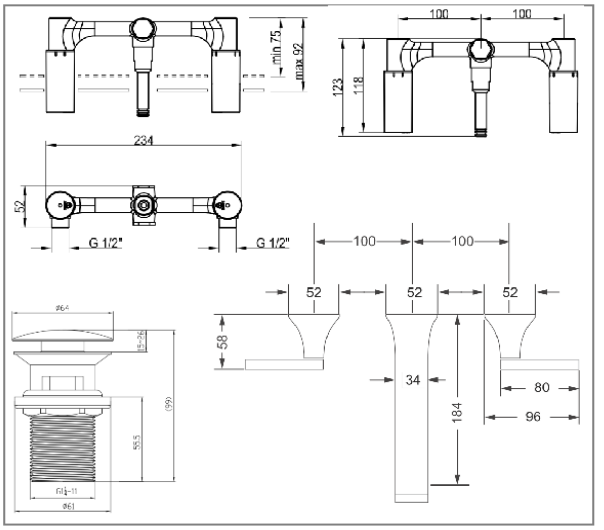
TECHNICAL INFORMATION