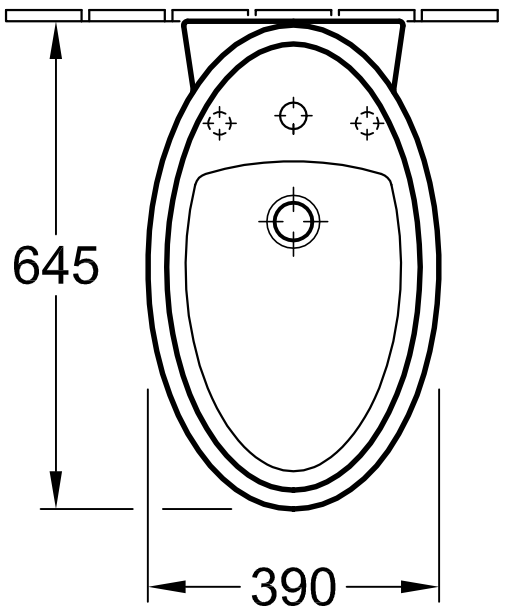

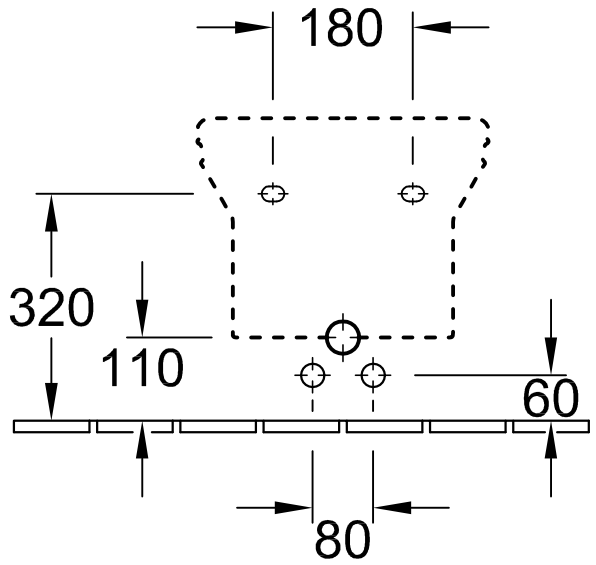

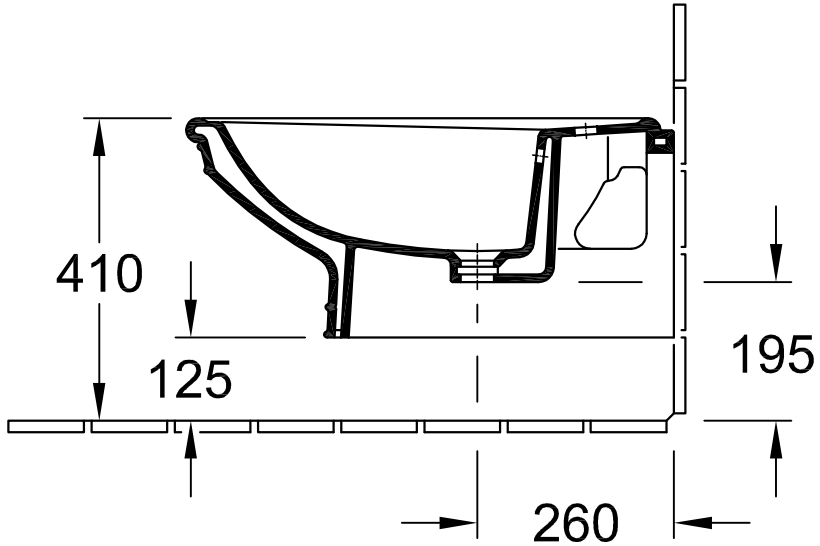

Designation			
AMADEA 7E86 B0 / B1 - Wall-mtd. bidet			Villeroy&Boch
Altered:	10. 2007	Scale: 1 : 10	This drawing may not be copied or passed on to third parties or competitive companies without our permission. Villeroy & Boch accepts no liability whatsoever for these data and technical drawings. Other parties use them at their own risk. The dimensions indicated are not binding. Villeroy & Boch reserves the right to make product changes.
	09.2010		
		Signed: HARU	
		Date: Jan. 2004	