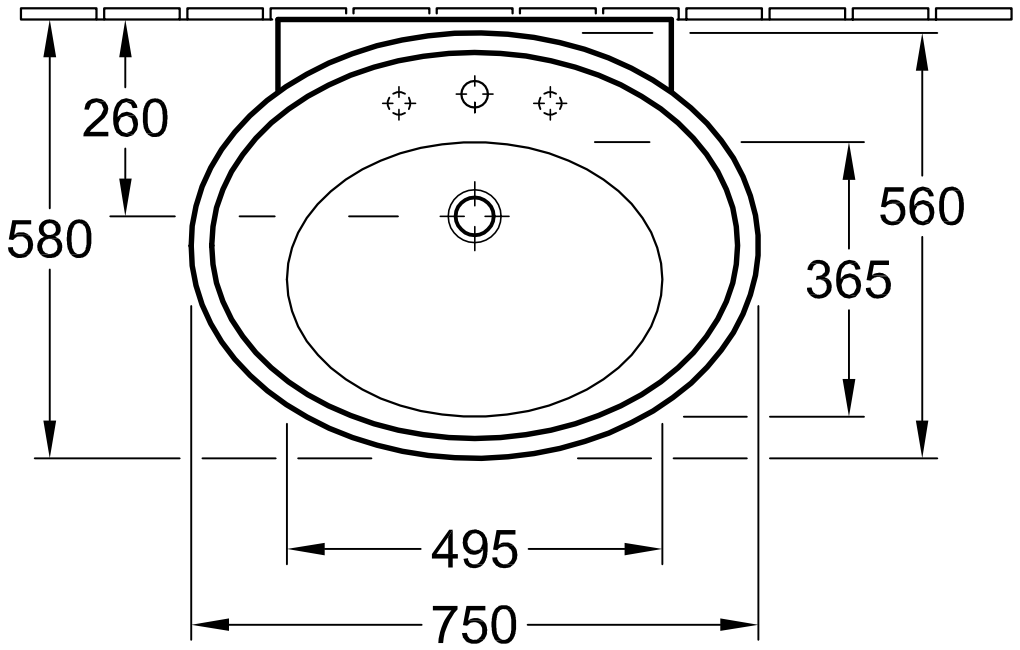

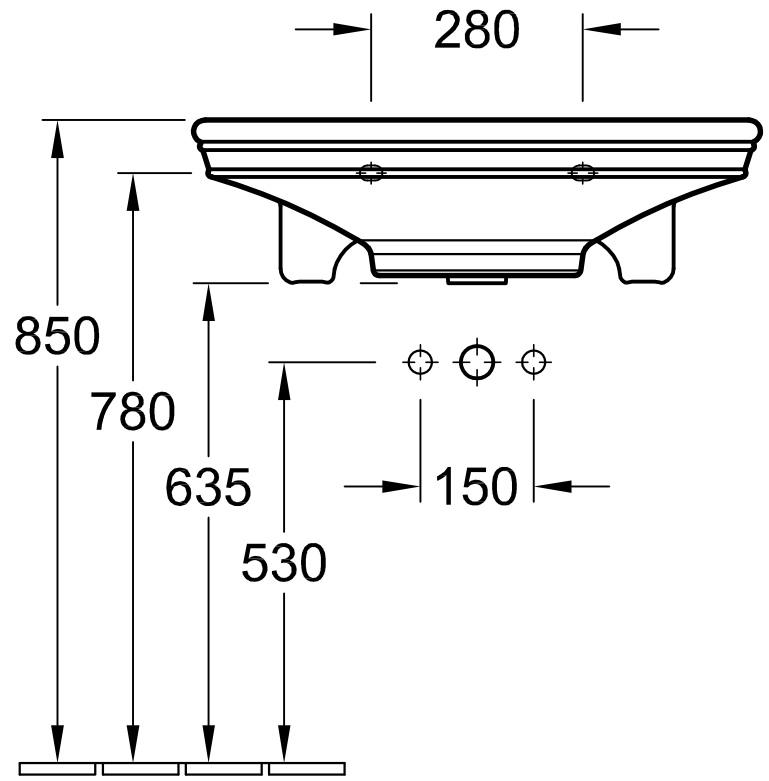

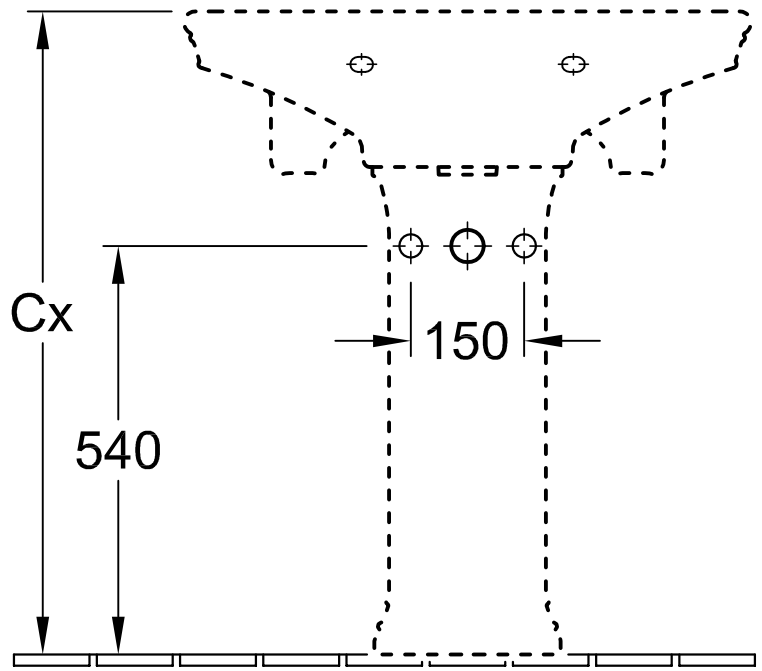

Position pedestal to determine Cx

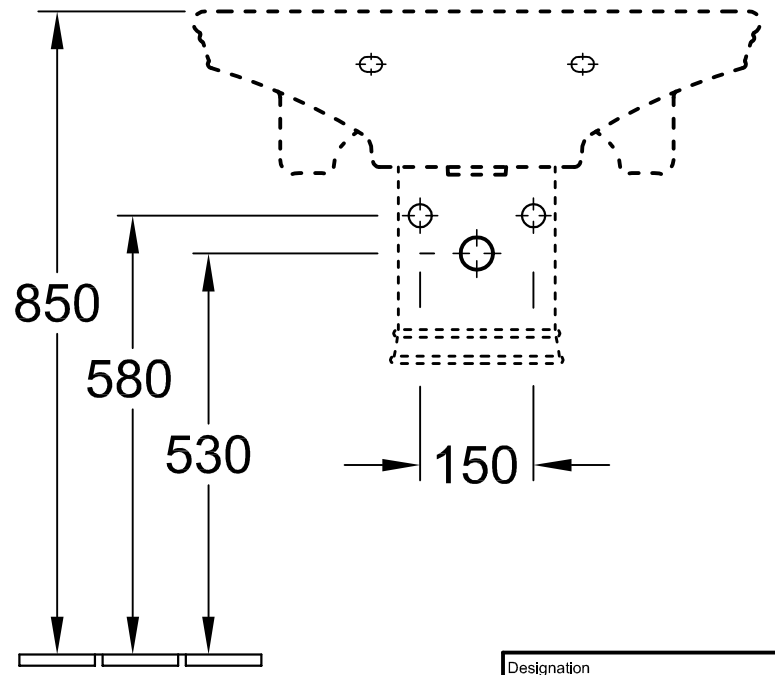

Designation
AMADEA
7A85 75 / A1 - Washbasin
7285 50 - Pedestal
7284 00 - Trap cover

Villeroy&Boch

Altered:		Scale:	1 : 10
		Signed:	R. Halberstadt
		Date:	Apr.´04

This drawing may not be copied or passed on to third parties or competitive companies without our permission. Villeroy & Boch accepts no liability whatsoever for these data and technical drawings. Other parties use them at their own risk. The dimensions indicated are not binding. Villeroy & Boch reserves the right to make product changes.