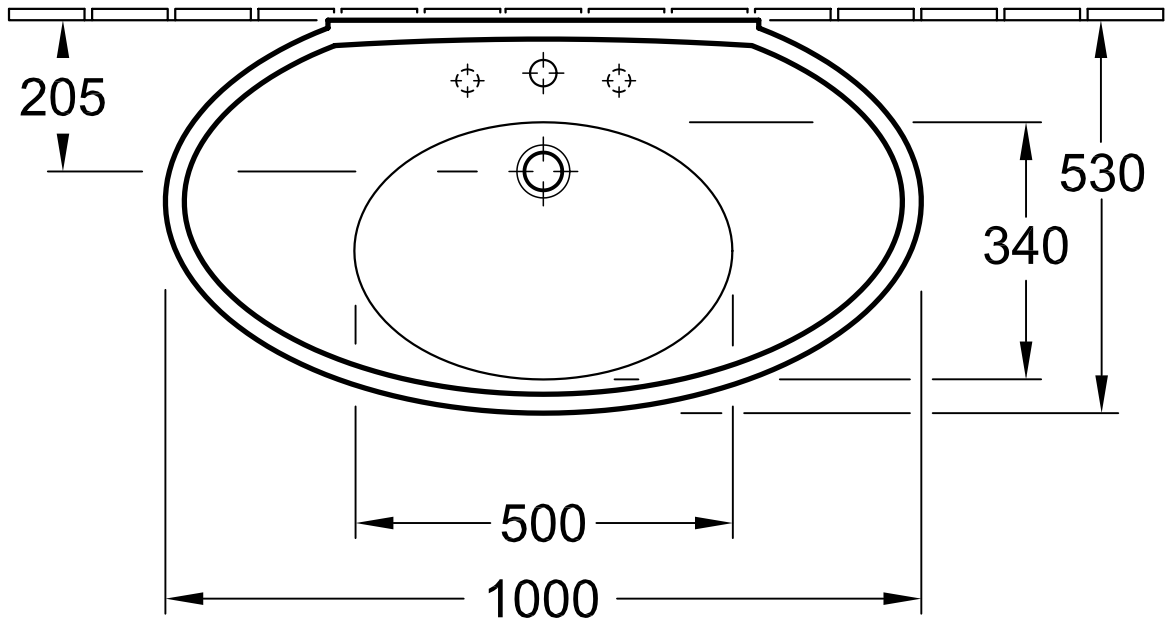

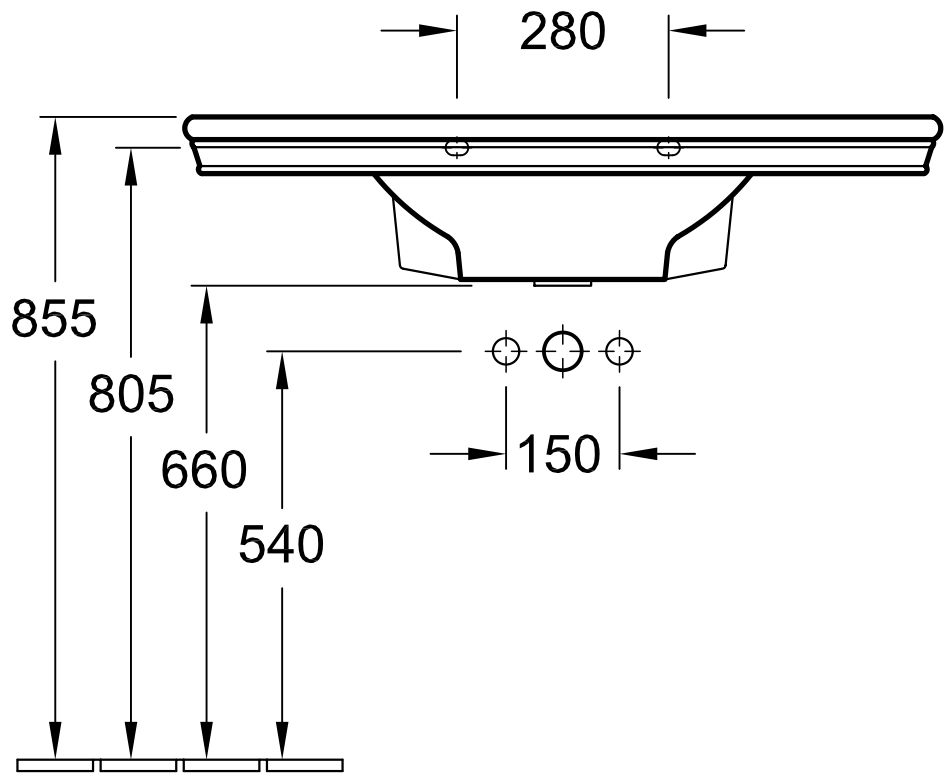

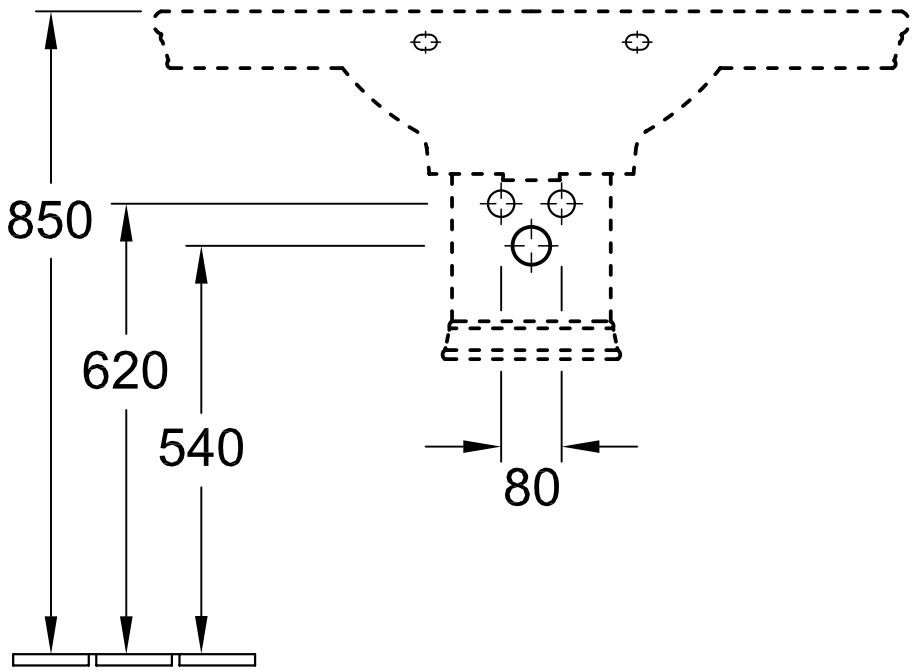

Designation AMADEA 7140 10 - Vanity washbasin 100 7284 00 - Trap cover			Villeroy&Boch
Altered:	Scale: 1 : 10		This drawing may not be copied or passed on to third parties or competitive companies without our permission. Villeroy & Boch accepts no liability whatsoever for these data and technical drawings. Other parties use them at their own risk. The dimensions indicated are not binding. Villeroy & Boch reserves the right to make product changes.
	Signed:	P. Graß	
	Date:	Aug. 30 1999	