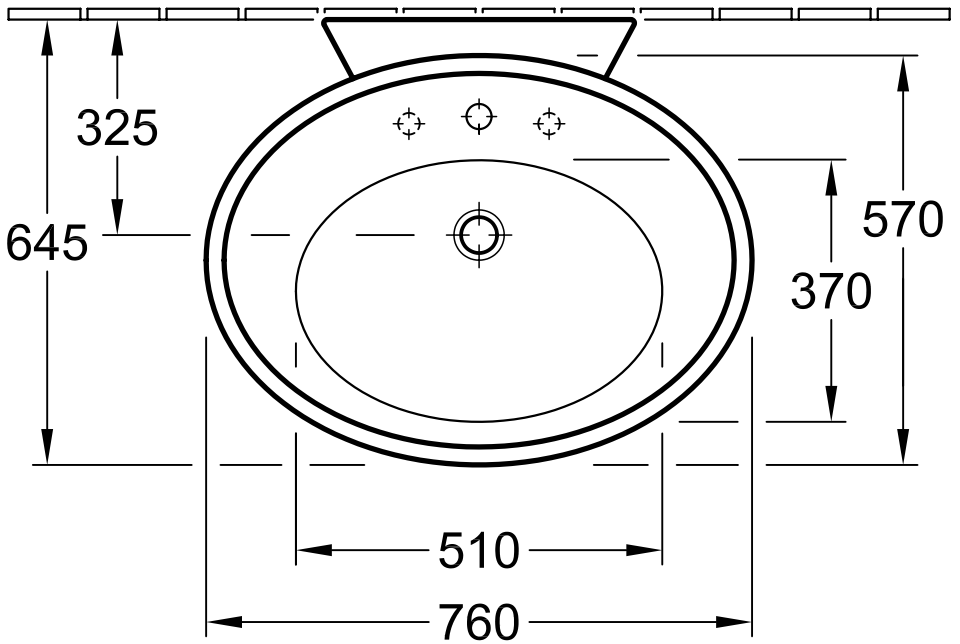

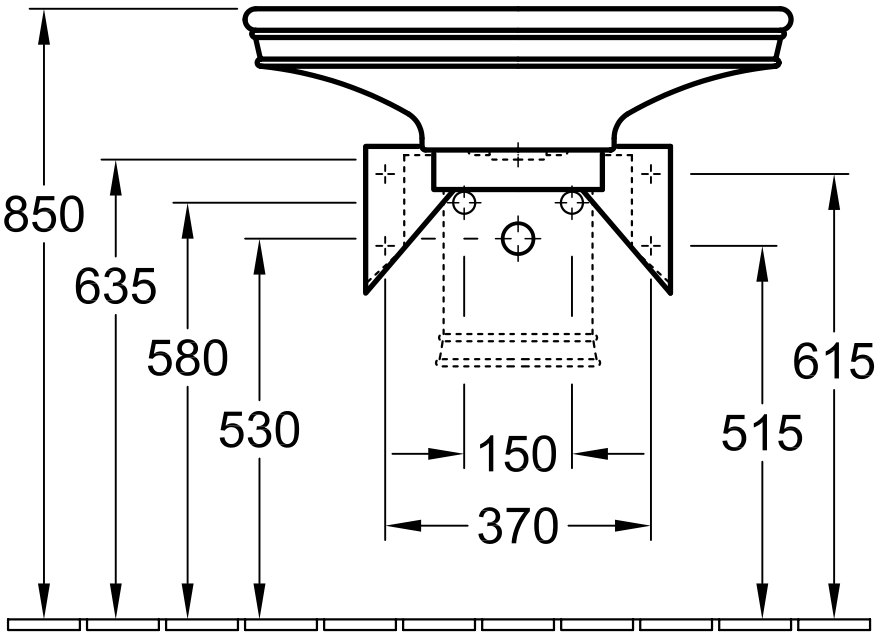

Designation

AMADEA

7185 75 - Washbasin / 7284 00 - Trap cover

8712 00 - Space-frame

Villeroy&Boch

Altered:	June 28 02 RH	Scale:	-
		Signed:	J. Zapp
		Date:	July 11 1999

This drawing may not be copied or passed on to third parties or competitive companies without our permission. Villeroy & Boch accepts no liability whatsoever for these data and technical drawings. Other parties use them at their own risk. The dimensions indicated are not binding. Villeroy & Boch reserves the right to make product changes.