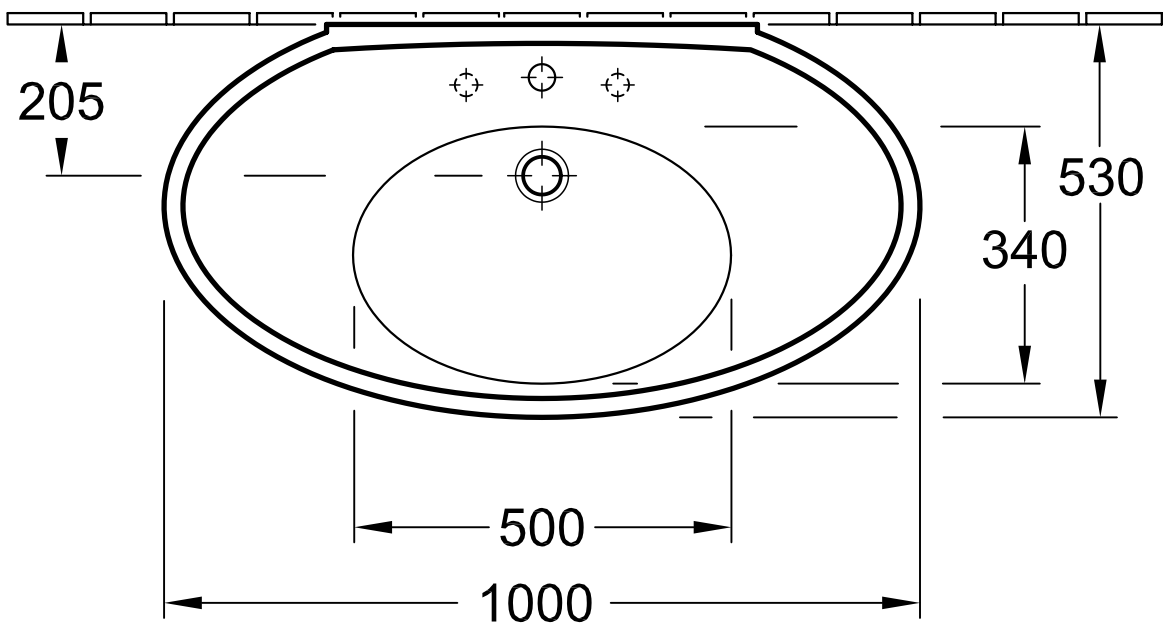

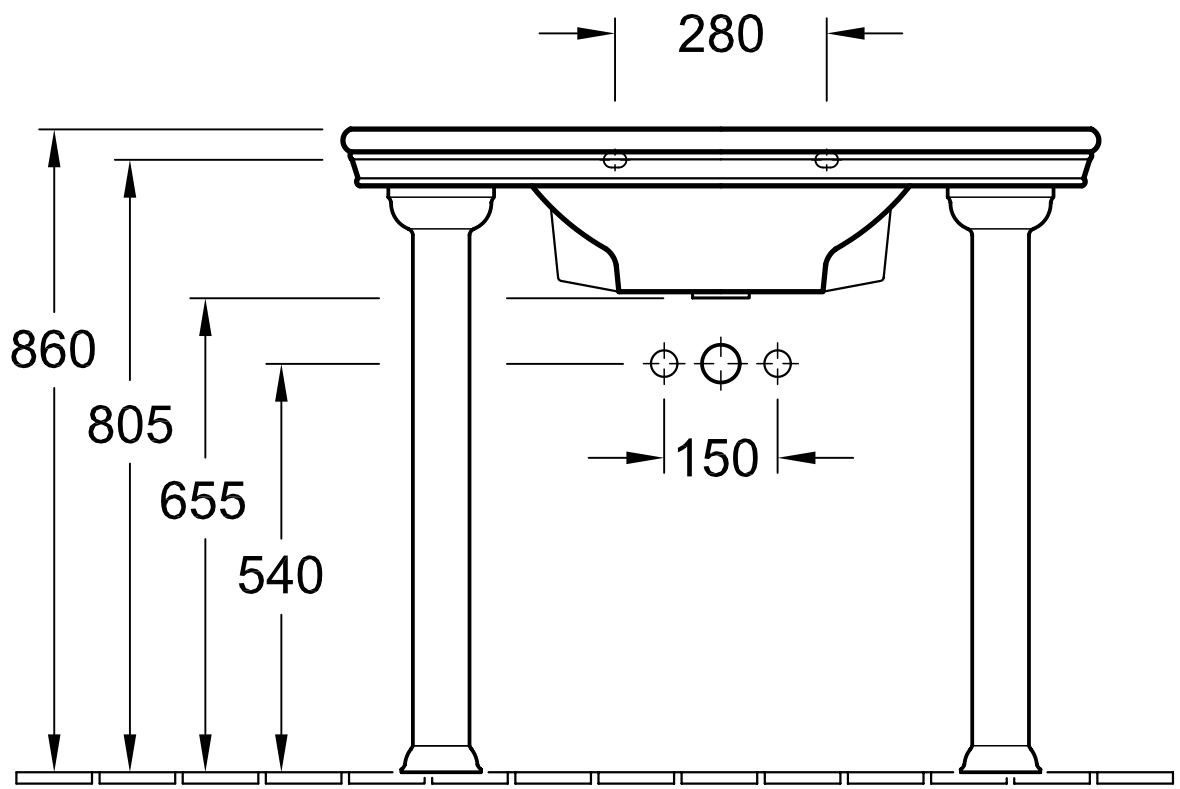

Installation height is determined by positioning legs under washbasin.

Designation AMADEA 7140 10 - Vanity washbasin 100 + leg 7201 50			Villeroy&Boch
Altered:	June 28 02 RH	Scale: 1 : 10	This drawing may not be copied or passed on to third parties or competitive companies without our permission. Villeroy & Boch accepts no liability whatsoever for these data and technical drawings. Other parties use them at their own risk. The dimensions indicated are not binding. Villeroy & Boch reserves the right to make product changes.
		Signed: P. Graß	
		Date: Aug. 30 1999	