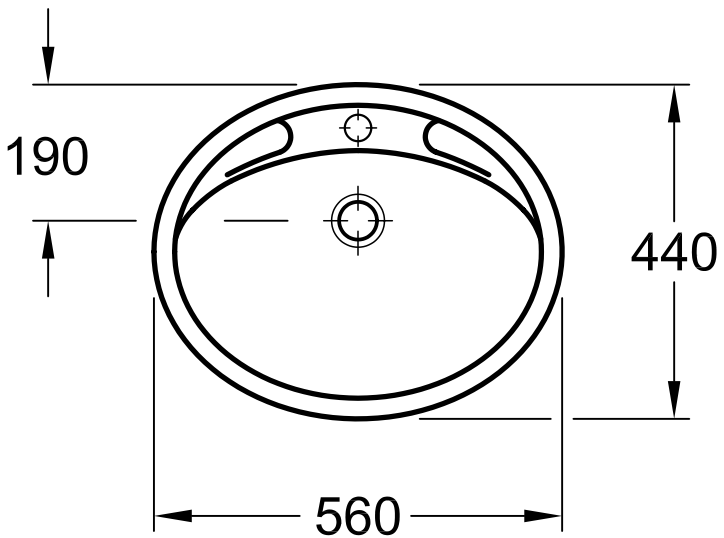

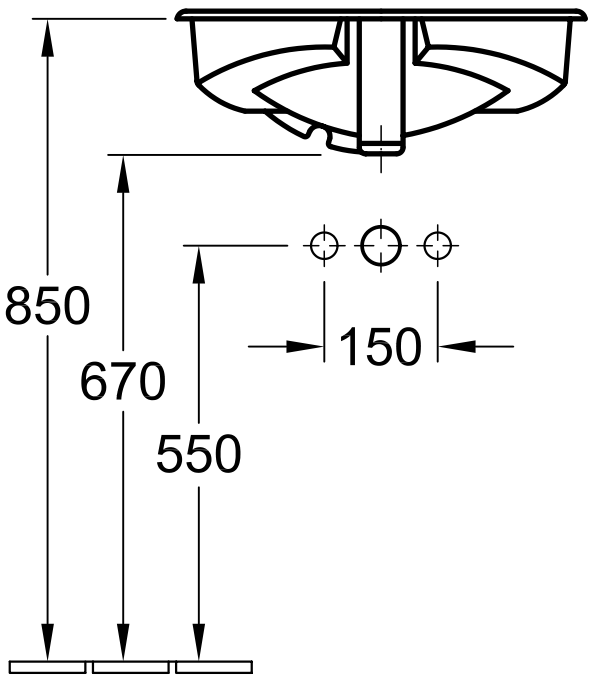

Designation

FLORINE

6149 - Built-in washbasin

Villeroy&Boch

Altered:	June 24 02 RH	Scale:	1 : 10
		Signed:	J. Zapp
		Date:	Feb. 2 1999

This drawing may not be copied or passed on to third parties or competitive companies without our permission. Villeroy & Boch accepts no liability whatsoever for these data and technical drawings. Other parties use them at their own risk. The dimensions indicated are not binding. Villeroy & Boch reserves the right to make product changes.