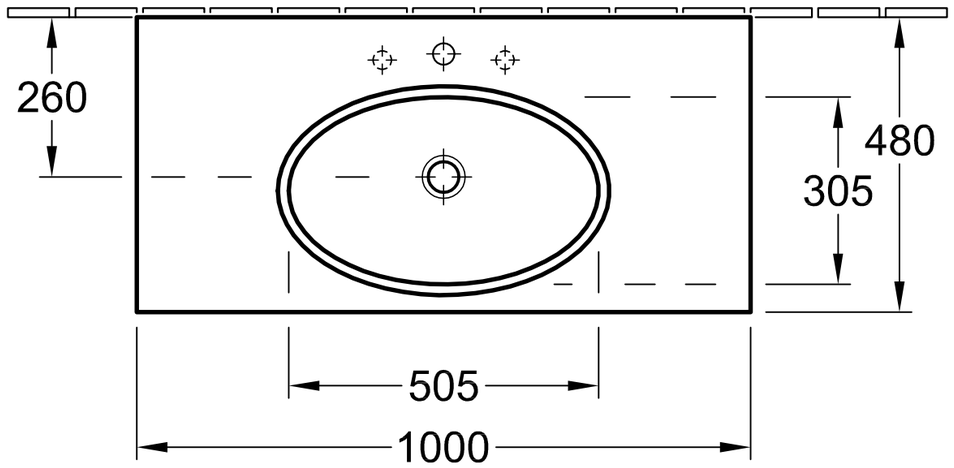

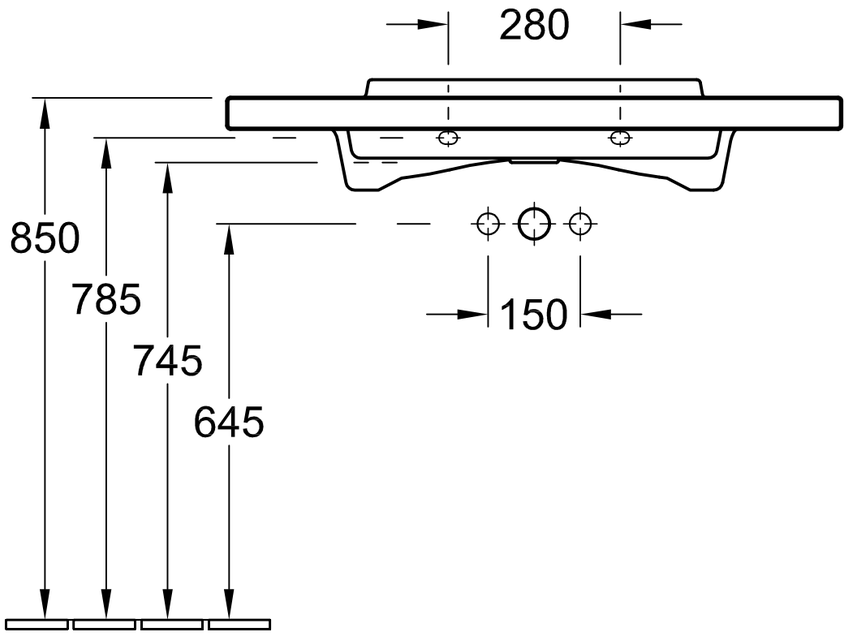

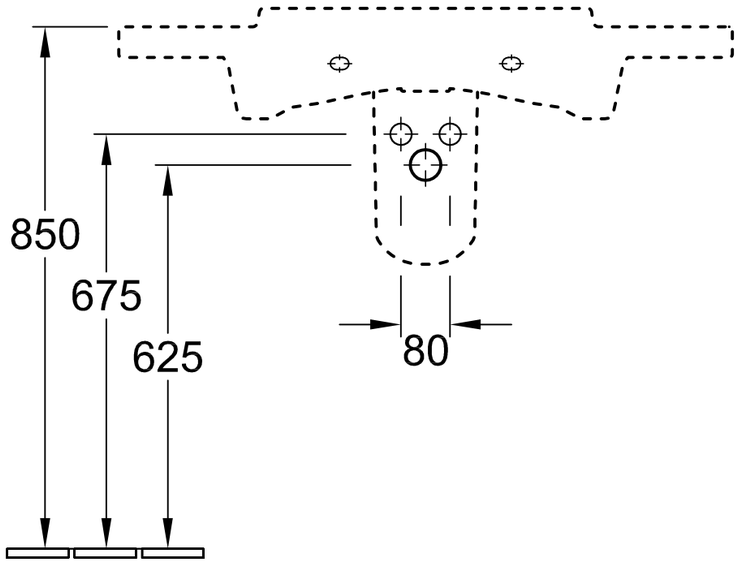

Designation LOOP 5182 A1_A2 - Vanity washbasin 5282 00 - Trap cover			Villeroy&Boch
Altered:	Scale:	1 : 10	This drawing may not be copied or passed on to third parties or competitive companies without our permission. Villeroy & Boch accepts no liability whatsoever for these data and technical drawings. Other parties use them at their own risk. The dimensions indicated are not binding. Villeroy & Boch reserves the right to make product changes.
	Signed:	HARU	
	Date:	02. 2008	