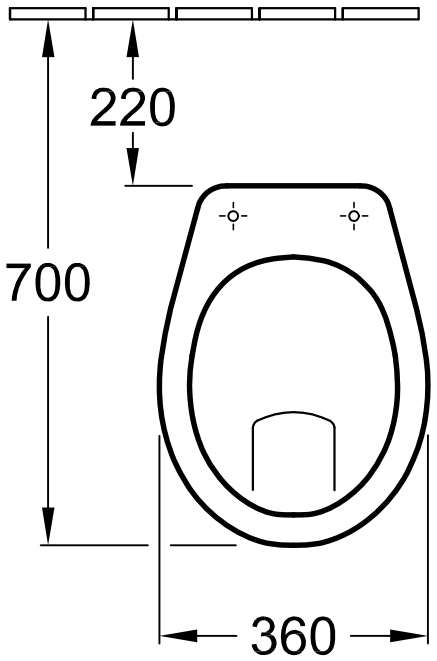

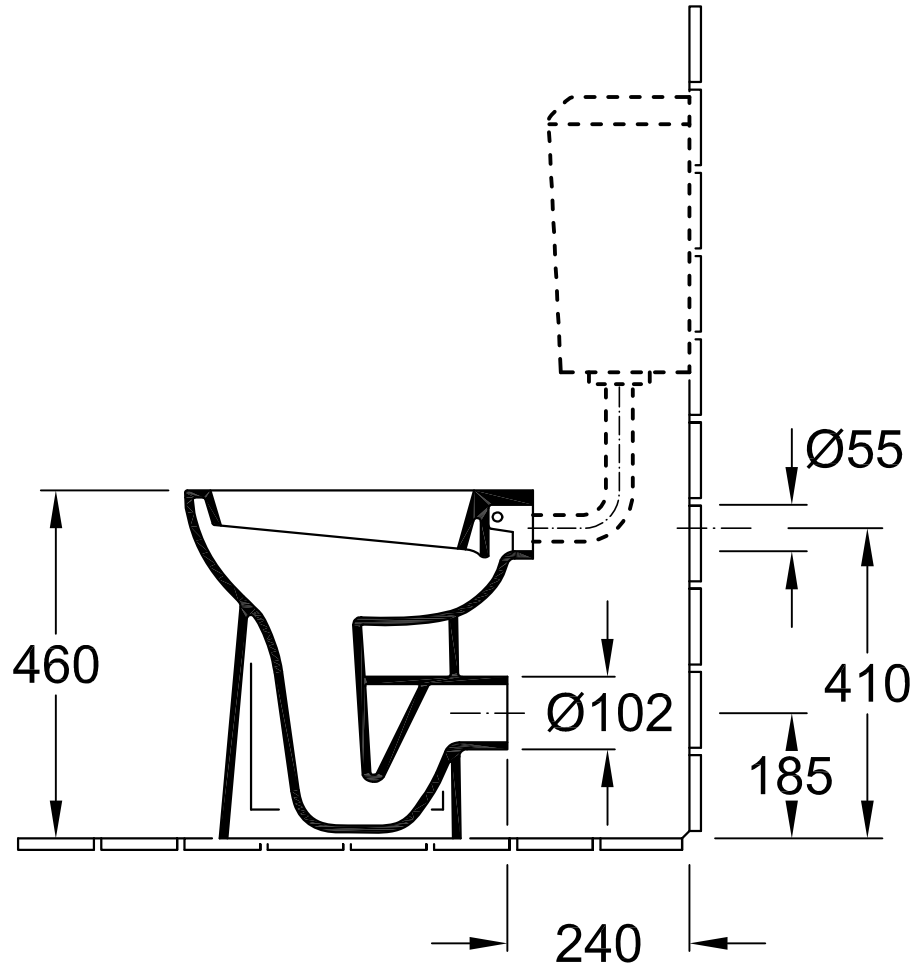

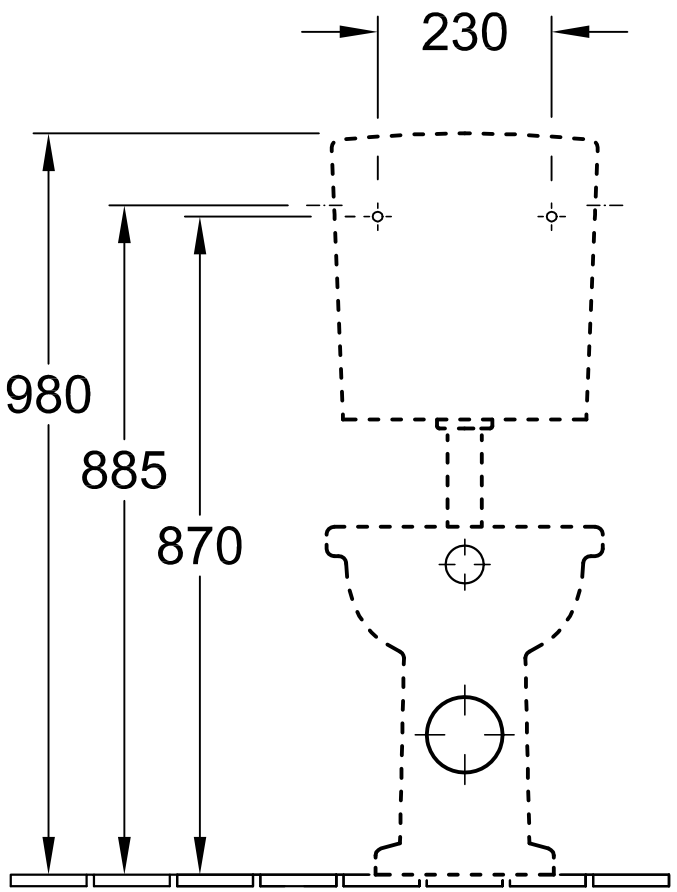

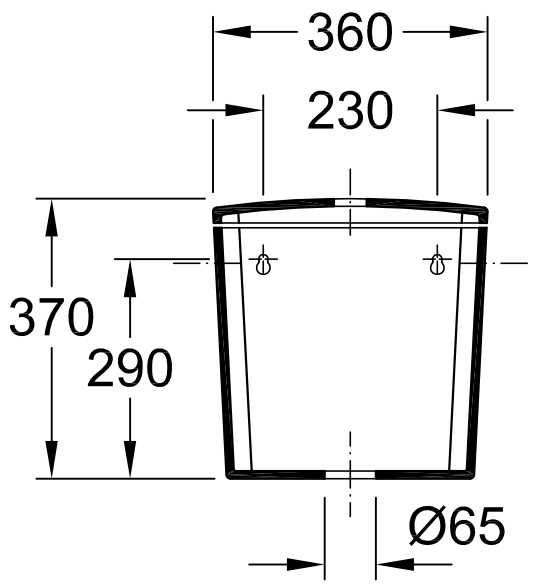

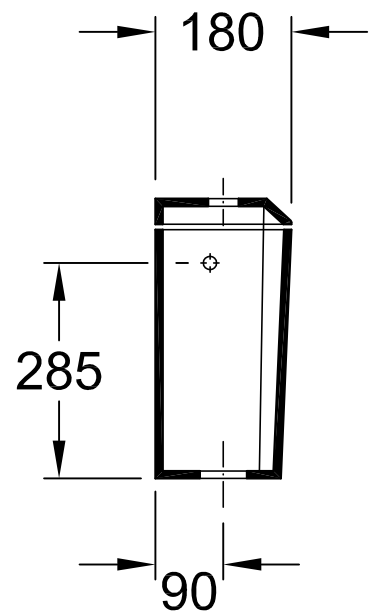

Designation

O.novo (Omnia - vita)

668410 - Wash-out WC

Villeroy&Boch

Altered:	Aug. 14 02 RH	Scale:	1 : 10
		Signed:	Thewes
		Date:	Oct. 1997

This drawing may not be copied or passed on to third parties or competitive companies without our permission. Villeroy & Boch accepts no liability whatsoever for these data and technical drawings. Other parties use them at their own risk. The dimensions indicated are not binding. Villeroy & Boch reserves the right to make product changes.