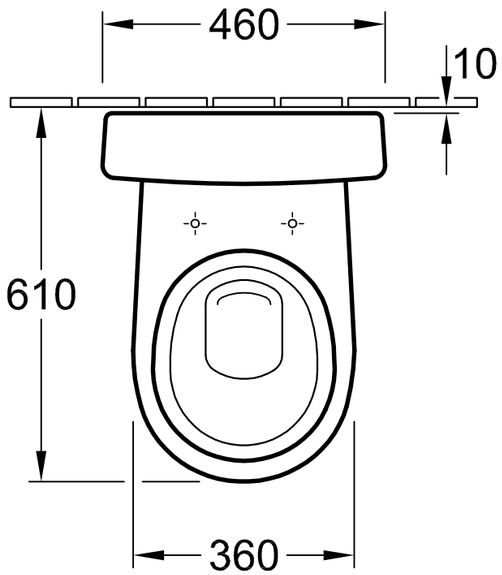

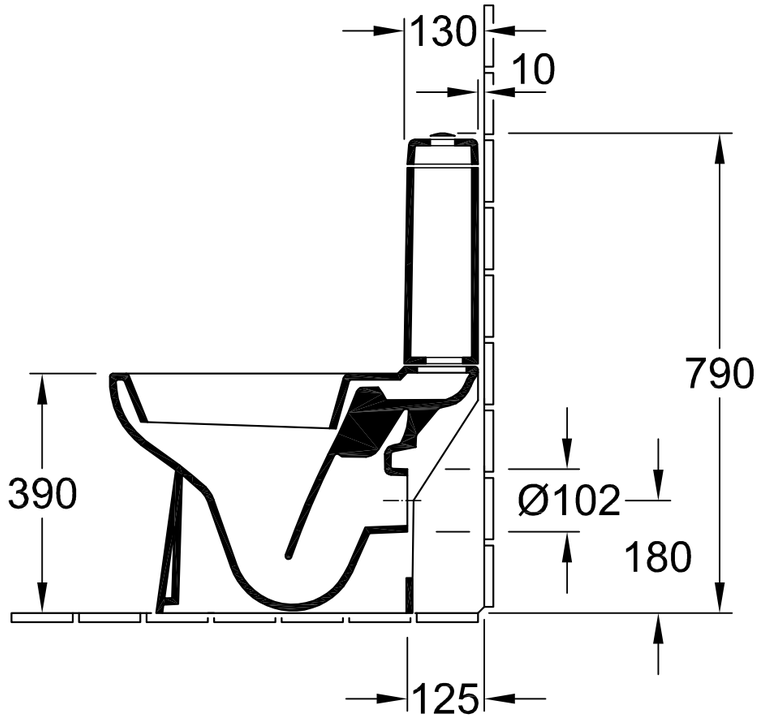

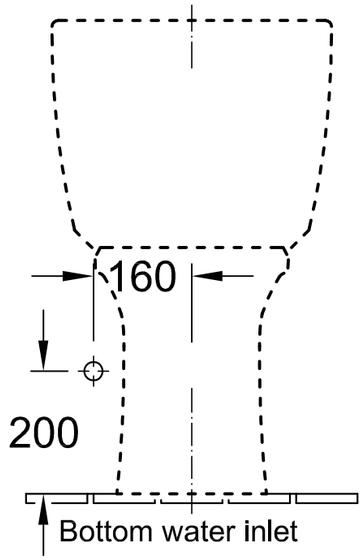

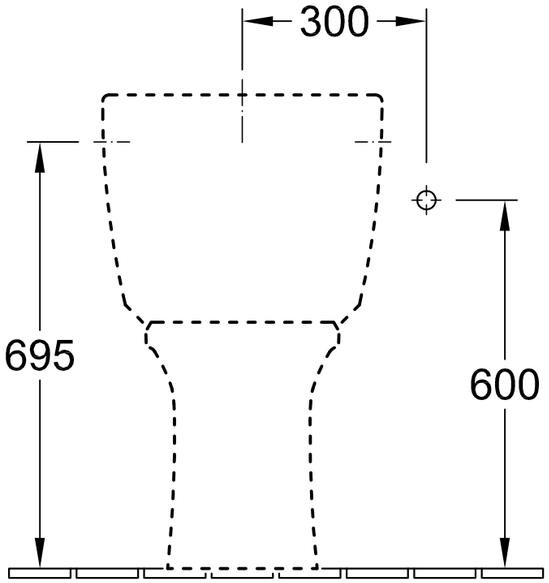

Inlet on both sides

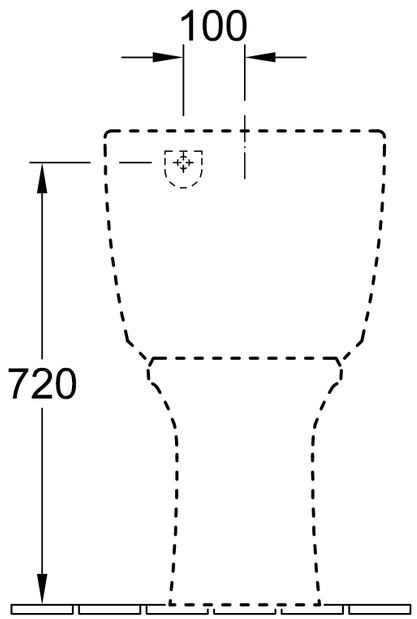

Rear inlet on left

Designation OMNIA compact 6669 10 - Washdown WC 7729 11 - Cistern 7729 A1 - Cistern			Villeroy&Boch
Altered:	10. 2006	Scale: M. 1:10	This drawing may not be copied or passed on to third parties or competitive companies without our permission. Villeroy & Boch accepts no liability whatsoever for these data and technical drawings. Other parties use them at their own risk. The dimensions indicated are not binding. Villeroy & Boch reserves the right to make product changes.
		Signed: R. Halberstadt	
		Date: 03. 2004	