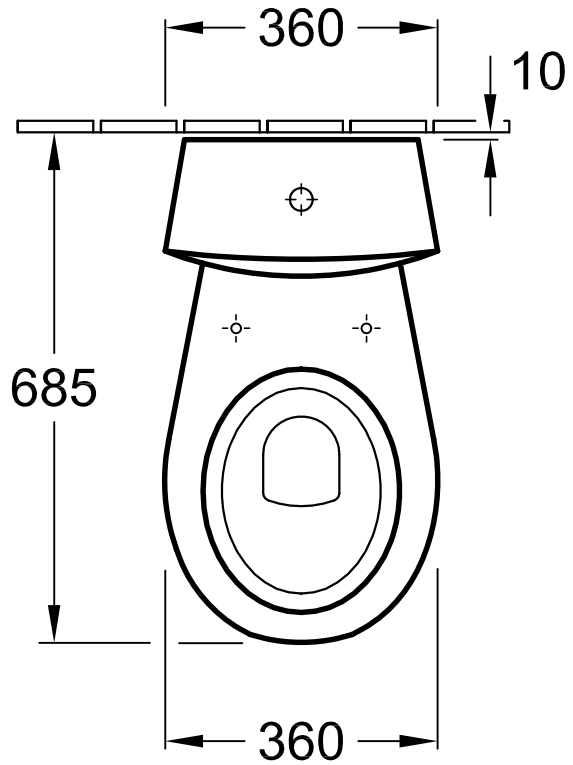

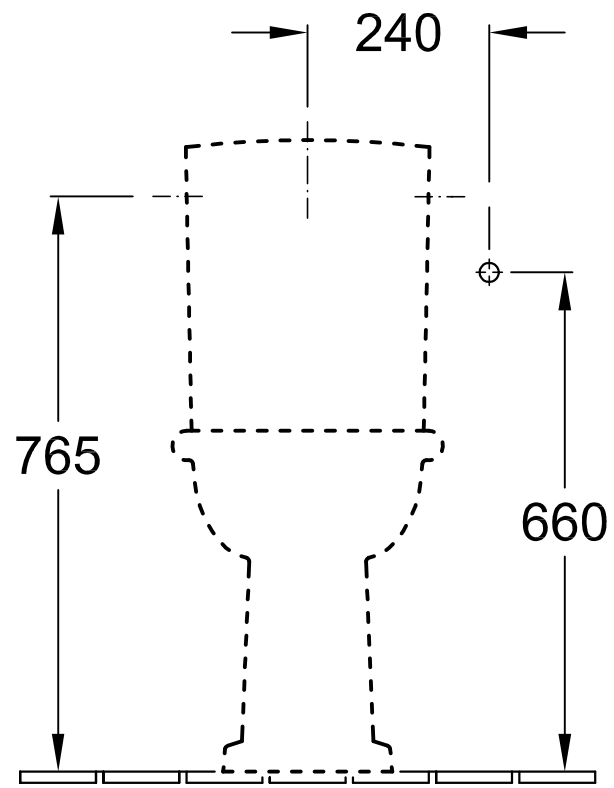

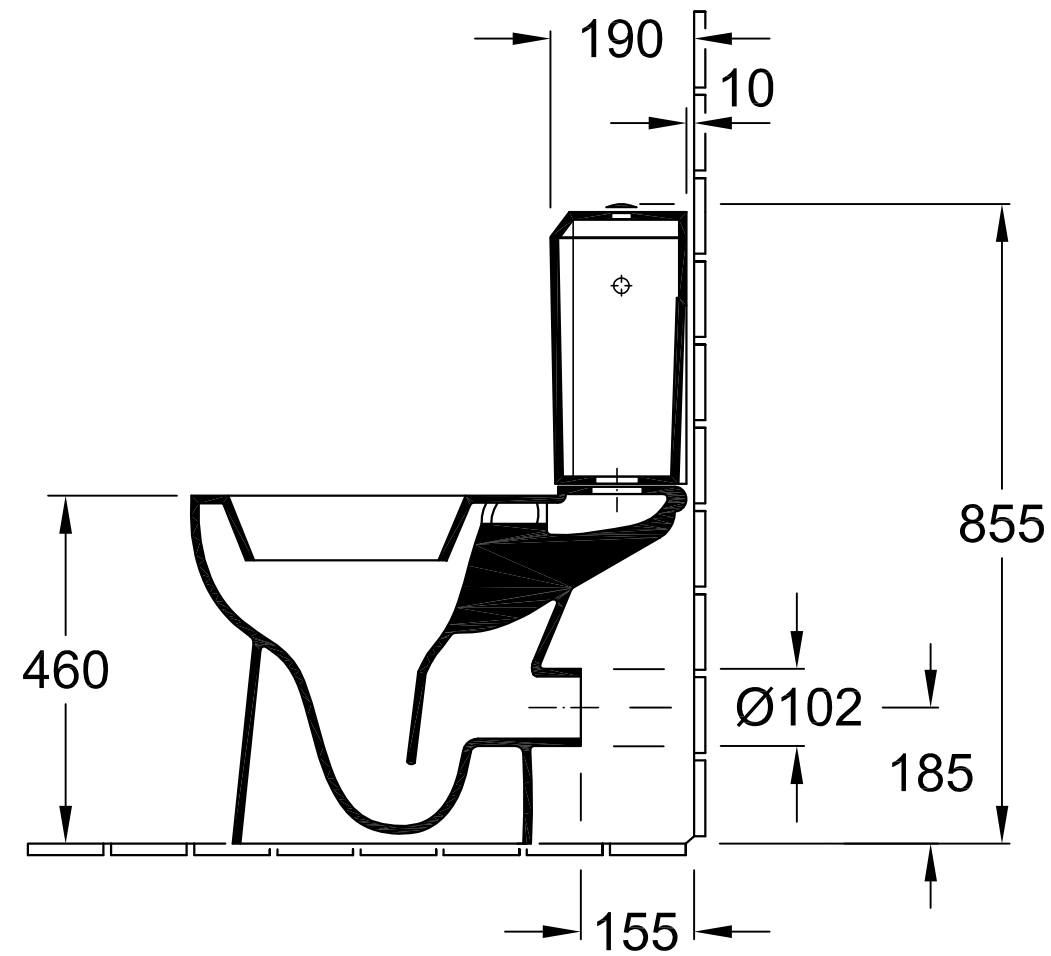

Designation

O.novo (Omnia - vita)
7683 H7 - Close-coupled washdown WC-suite
7D19 21 - Cistern

Villeroy&Boch

Altered:		Approved by:	FB
		Date:	18.02.2011
		Signed:	SEW
		Date:	02.2011

This drawing may not be copied or passed on to third parties or competitive companies without our permission. Villeroy & Boch accepts no liability whatsoever for these data and technical drawings. Other parties use them at their own risk. The dimensions indicated are not binding. Villeroy & Boch reserves the right to make product changes.