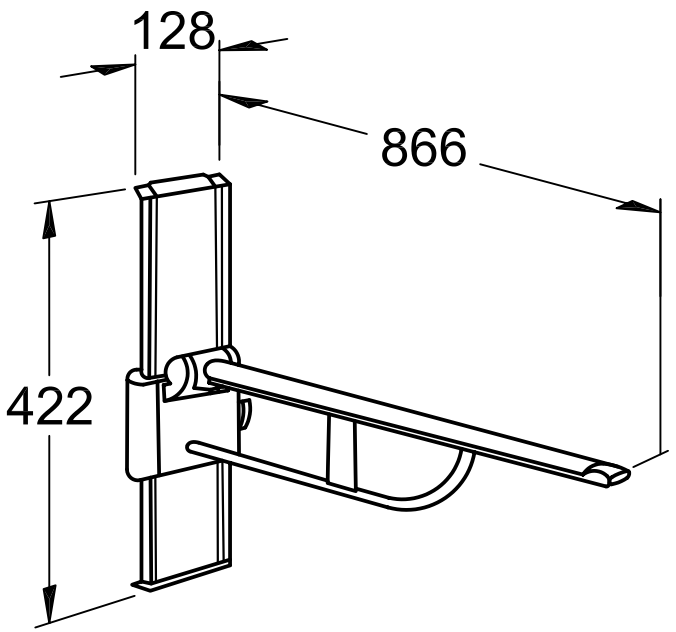

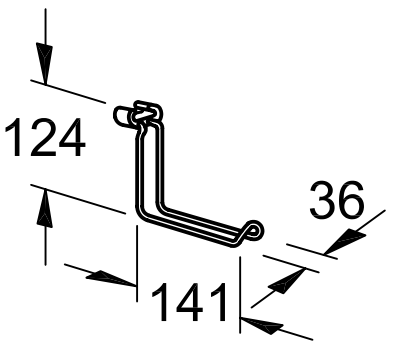

Projection from wall with support
folded away : 210 mm

Designation			
OMNIA - vita 8719 00 - Folding support 8718 50 - Toilet roll holder			Villeroy&Boch
Altered:	Scale: 1 : 10		This drawing may not be copied or passed on to third parties or competitive companies without our permission. Villeroy & Boch accepts no liability whatsoever for these data and technical drawings. Other parties use them at their own risk. The dimensions indicated are not binding. Villeroy & Boch reserves the right to make product changes.
	Signed:	SIEREN W.	
	Date:	Oct. 2003	