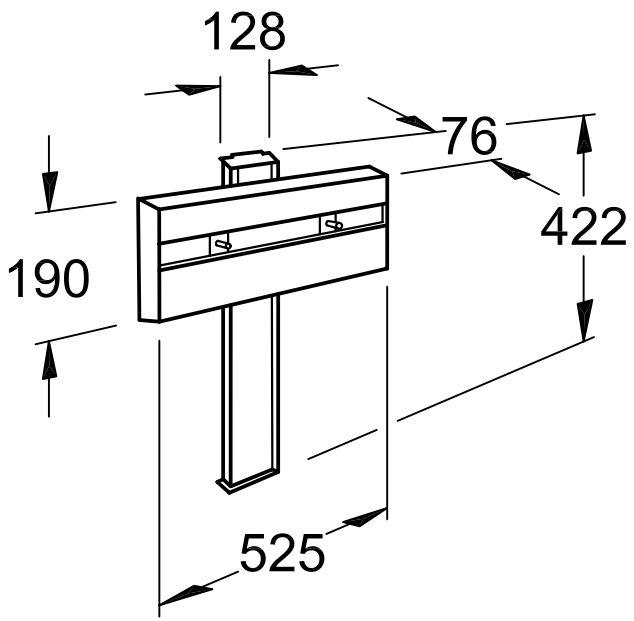

Designation TARGA vita 8725 00 - Washbasin lifter			Villeroy&Boch BATHROOM AND KITCHEN DIVISION MARKETING - PRODUCT DEVELOPMENT
Altered:		Scale: 1 : 10	This drawing may not be copied or passed on to third parties or competitive companies without our permission.
		Signed: SIEREN W.	
		Date: Oct. 2003	CAD drawing