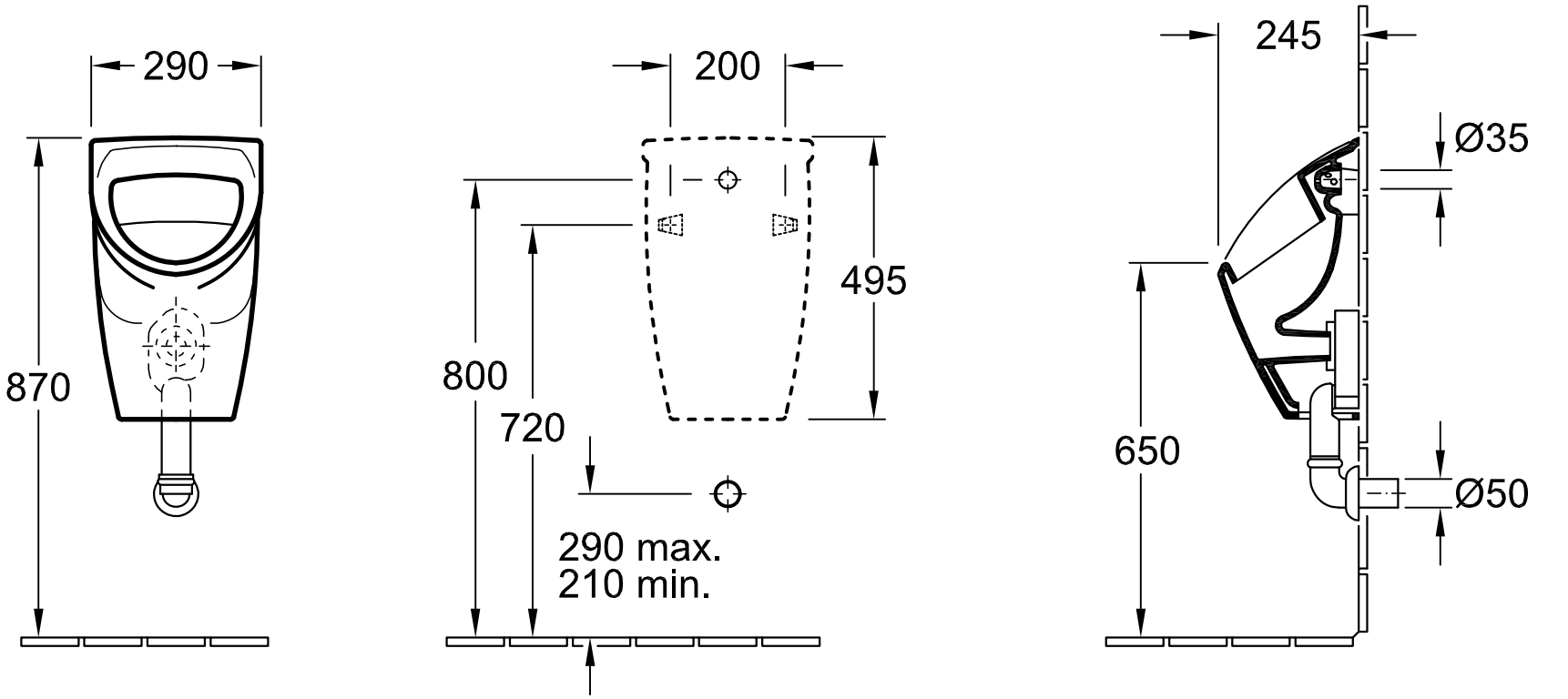

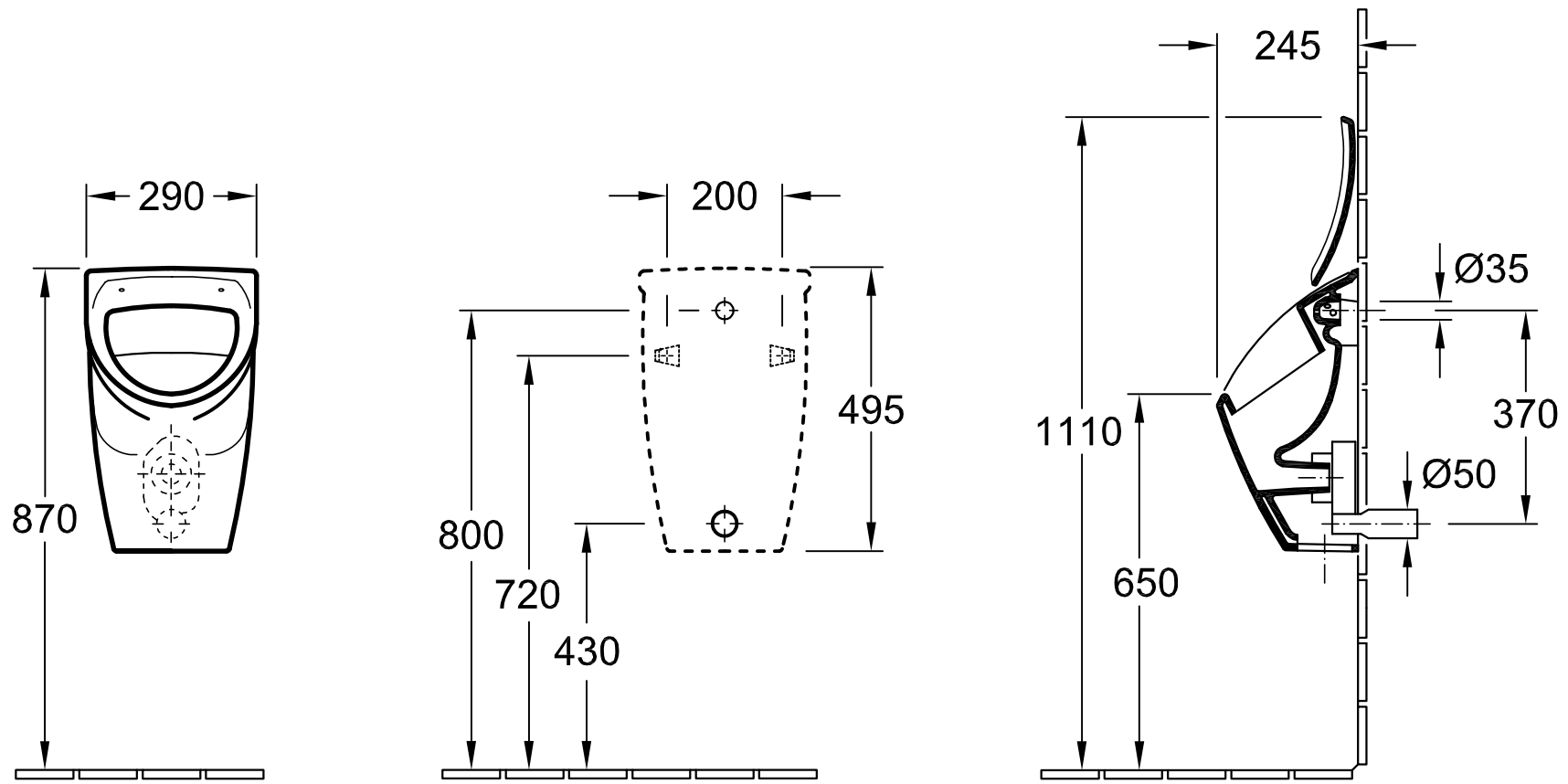

Designation O.novo (Omnia - compact) 7557 00 / 01 / 05 / 06 - Urinal			Villeroy&Boch
Altered:	10. 2006	Scale: -	This drawing may not be copied or passed on to third parties or competitive companies without our permission. Villeroy & Boch accepts no liability whatsoever for these data and technical drawings. Other parties use them at their own risk. The dimensions indicated are not binding. Villeroy & Boch reserves the right to make product changes.
		Signed: P. Graß / RH	
		Date: 15.09.99	