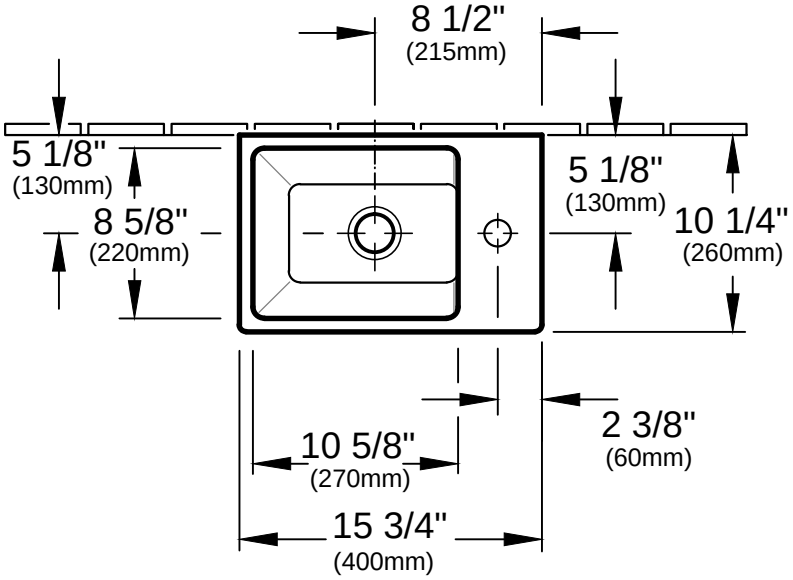

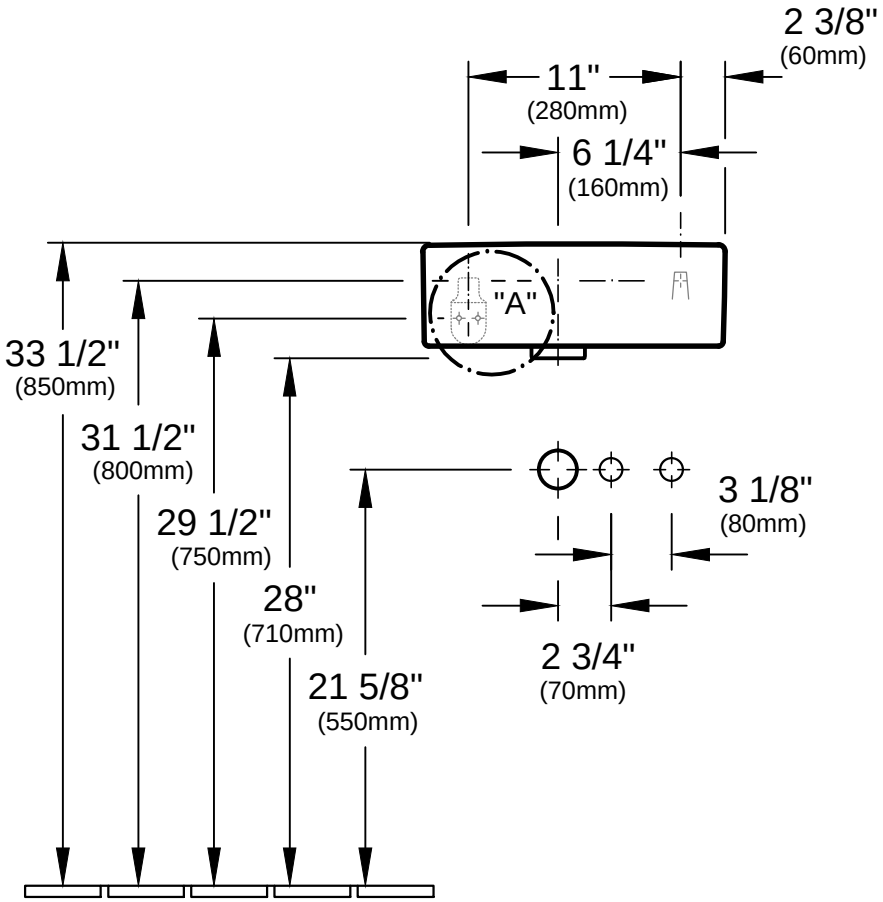

Detail "A"

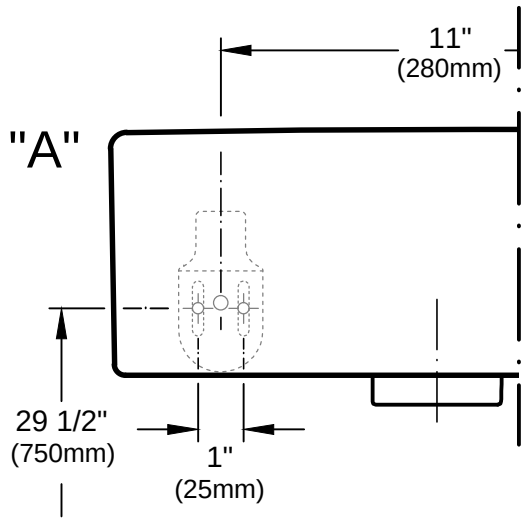

Designation Memento 5333 U0 XX - Wall-mounted Sink				Villeroy&Boch
Altered:	18.10.2012	Approved by:	MP	This drawing may not be copied or passed on to third parties or competitive companies without our permission. Villeroy & Boch accepts no liability whatsoever for these data and technical drawings. Other parties use them at their own risk. The dimensions indicated are not binding. Villeroy & Boch reserves the right to make product changes.
		Date:	08. 2012	
		Signed:	MHK	
		Date:	05. 2012	