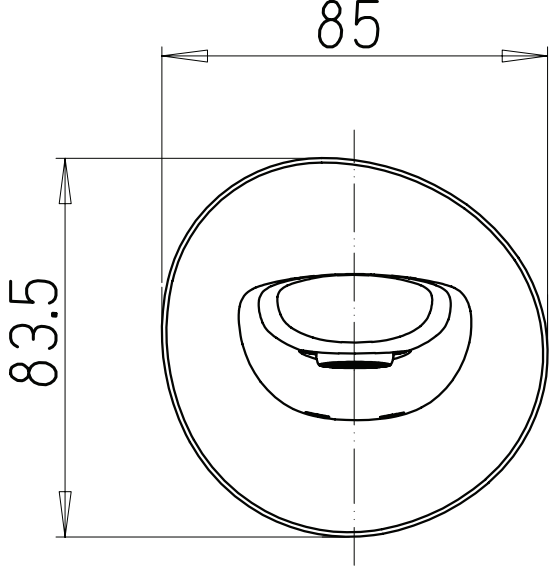
85
83.5

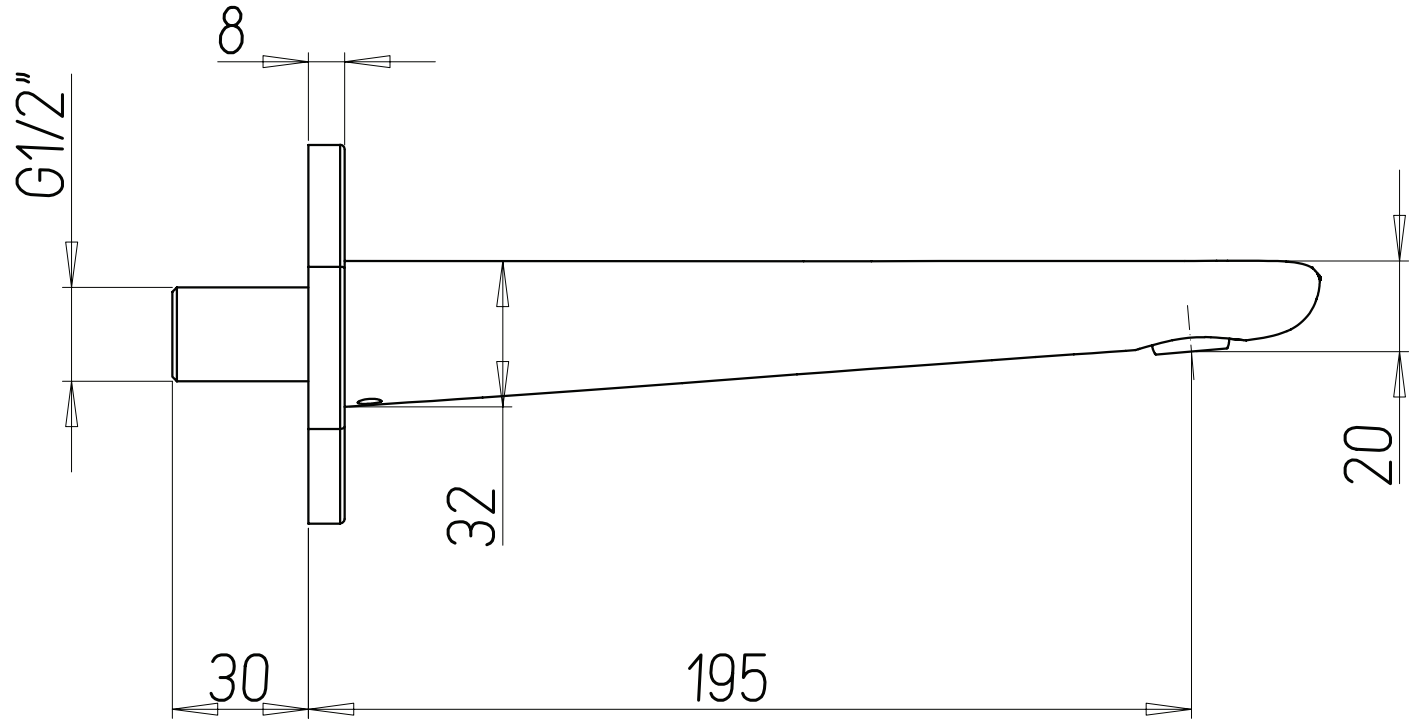
8
G1/2"
32
20
30
195

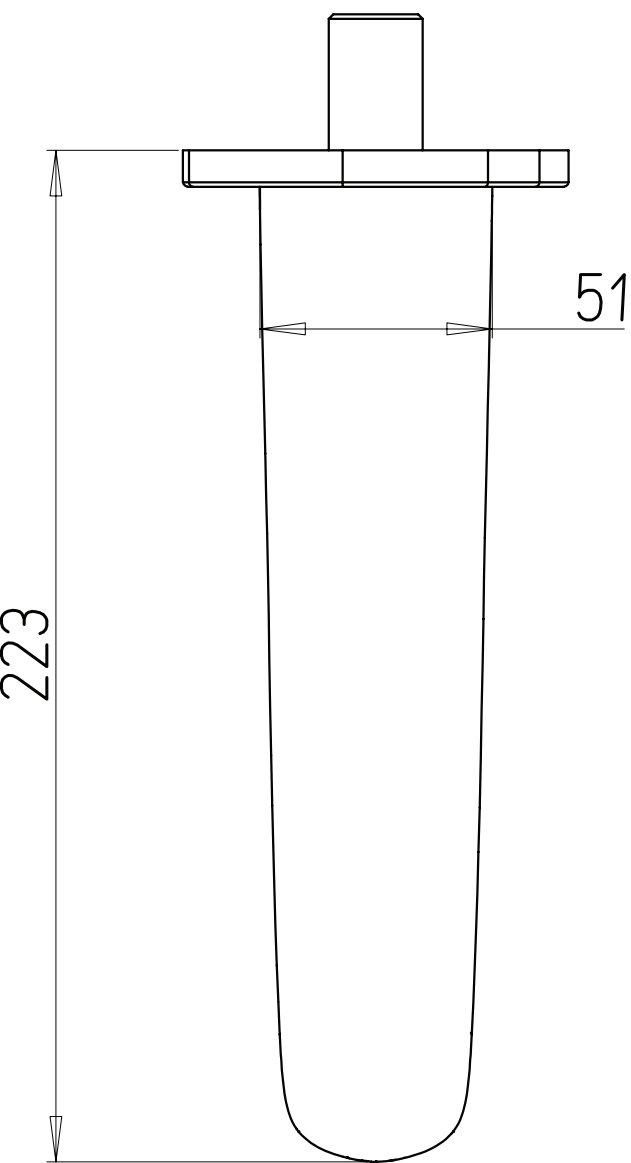
51
223