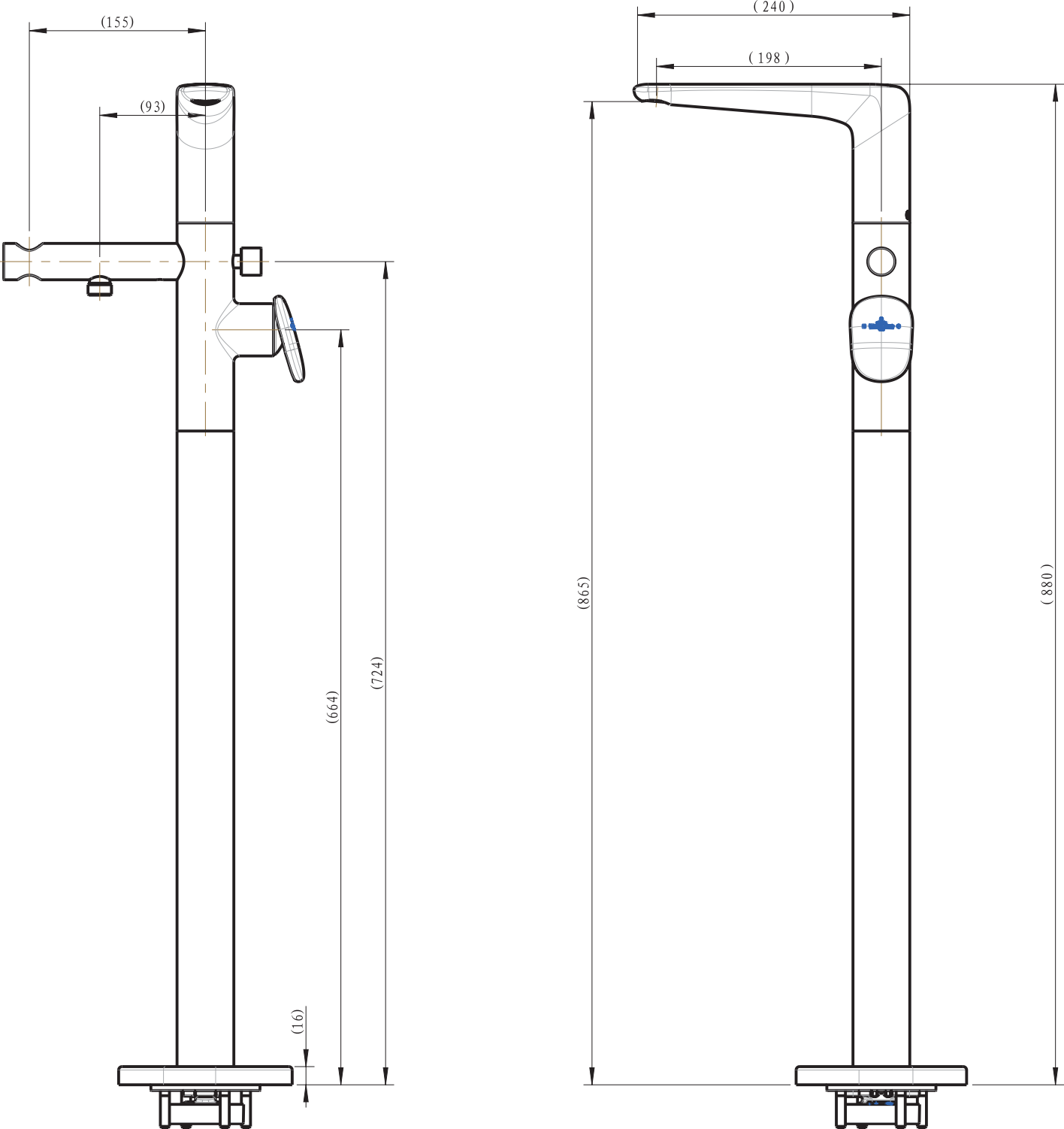
(155)
(93)
(664)
(724)
(16)
(240)
(198)
(865)
(880)