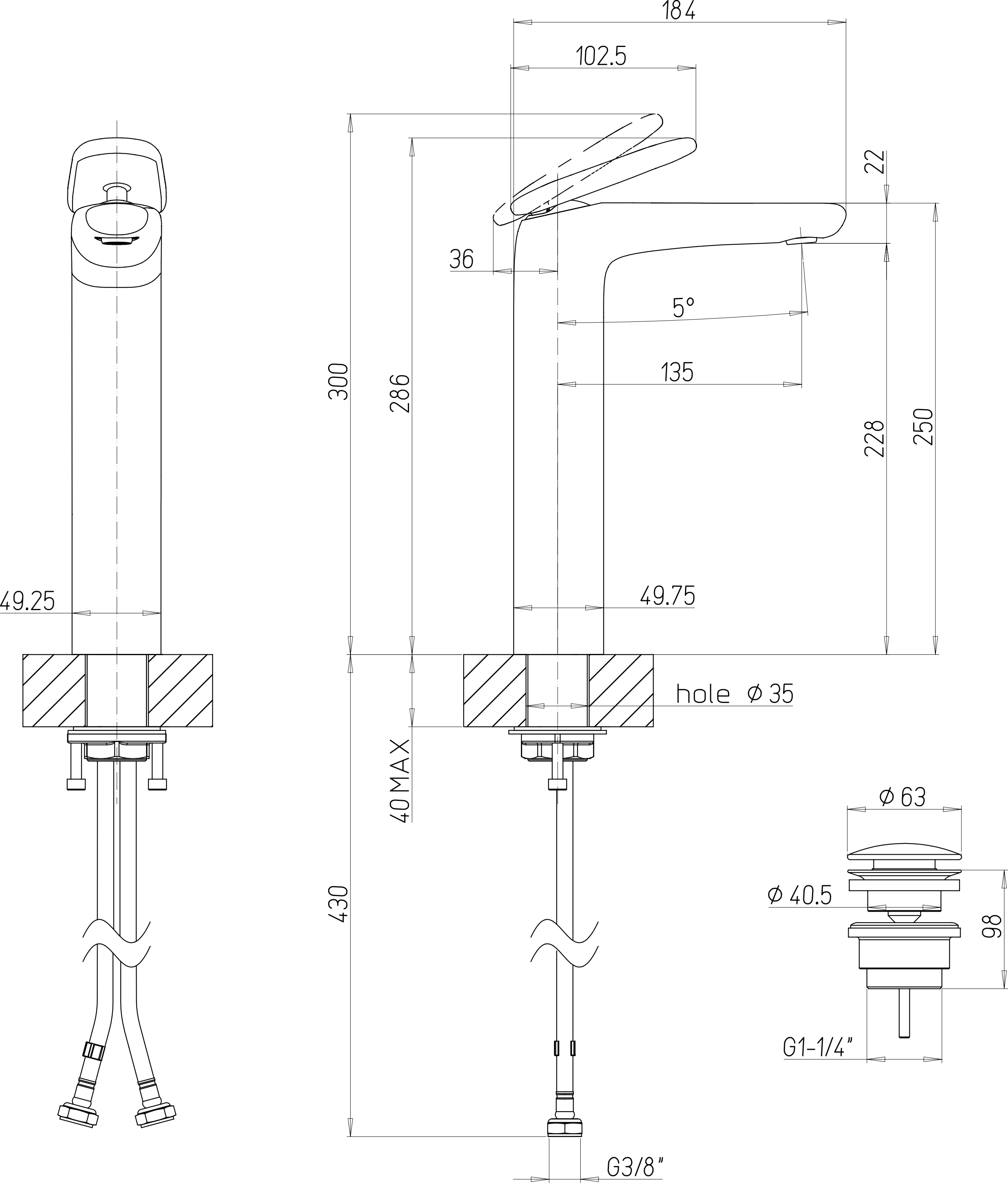
184
102.5
22
36
5°
135
300
286
228
250
49.25
49.75
hole Ø 35
40MAX
430
Ø 63
Ø 40.5
98
G1-1/4"
G3/8"