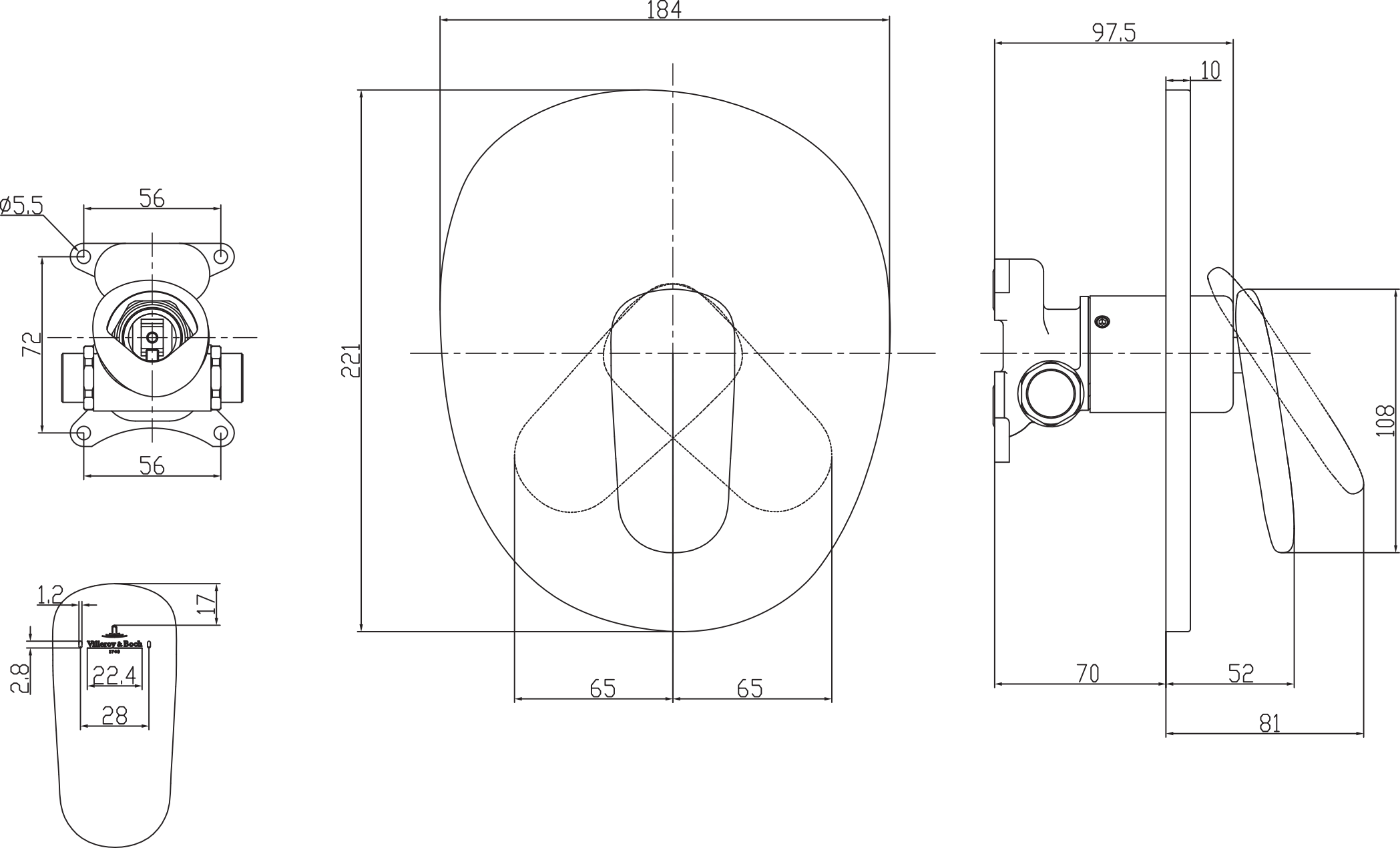
184
97.5
10
ø5.5
56
72
221
108
56
1.2
17
2.8
22.4
28
65
65
70
52
81