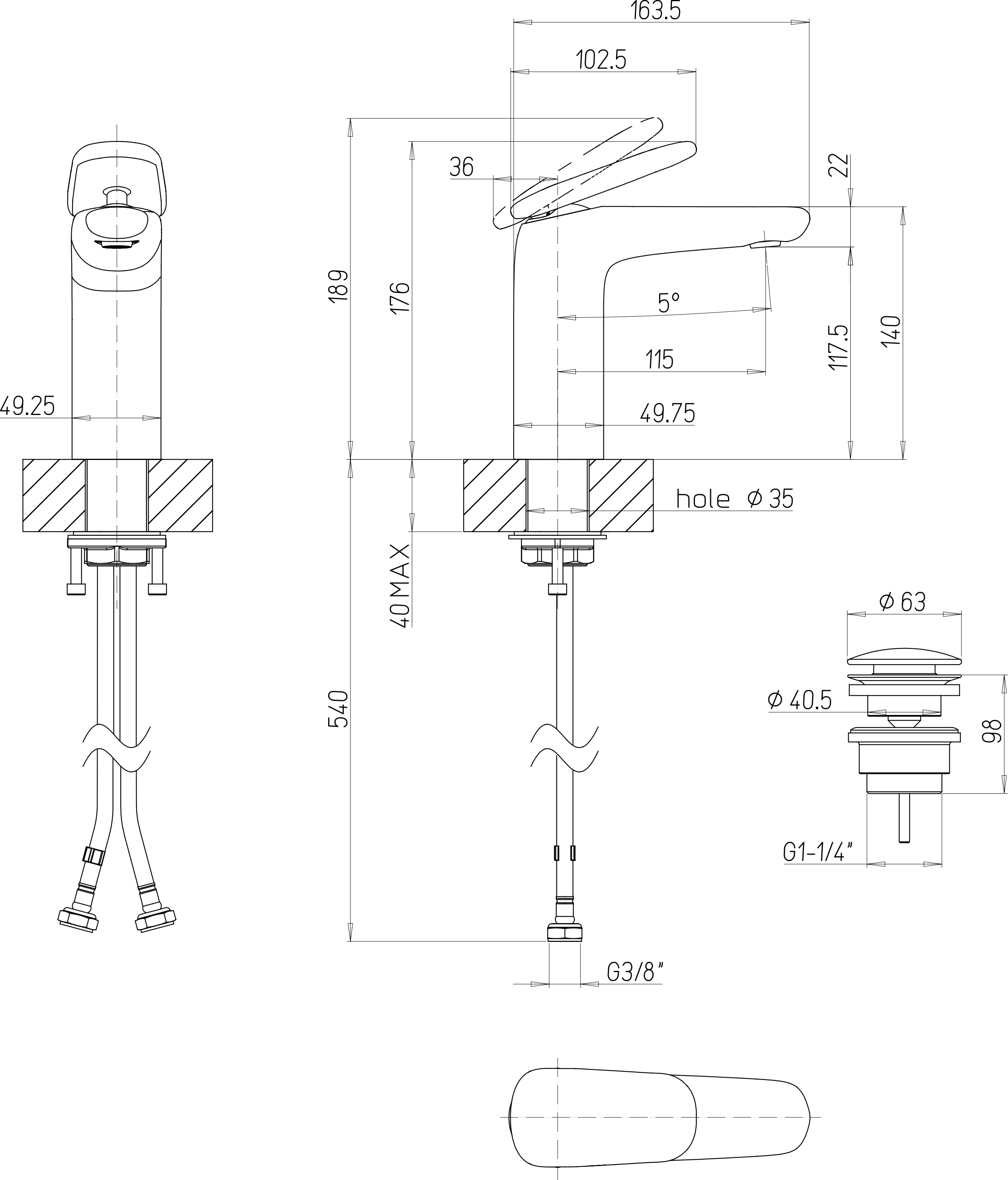
163.5
102.5
36
22
189
176
5°
117.5
140
115
49.25
49.75
hole ⌀35
40MAX
⌀63
⌀40.5
540
98
G1-1/4"
G3/8"