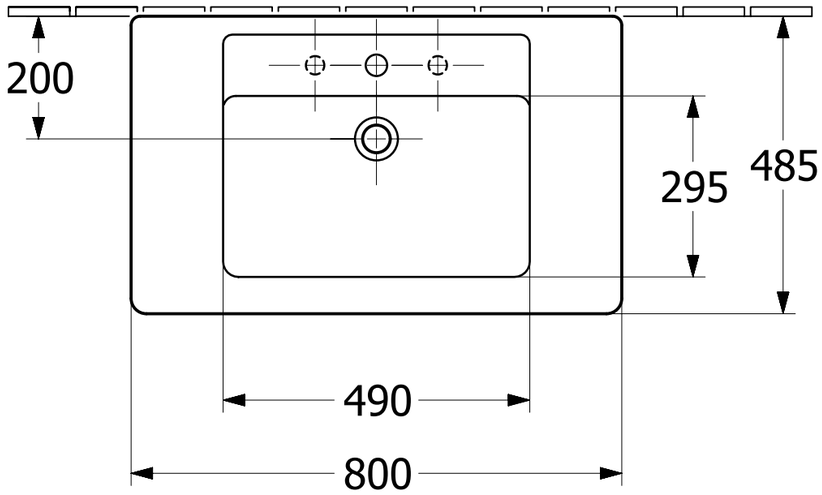

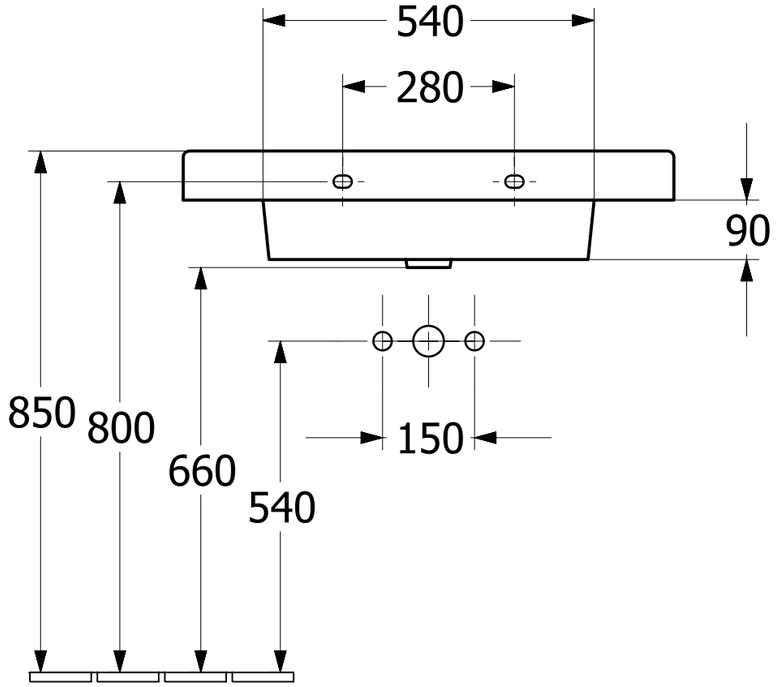

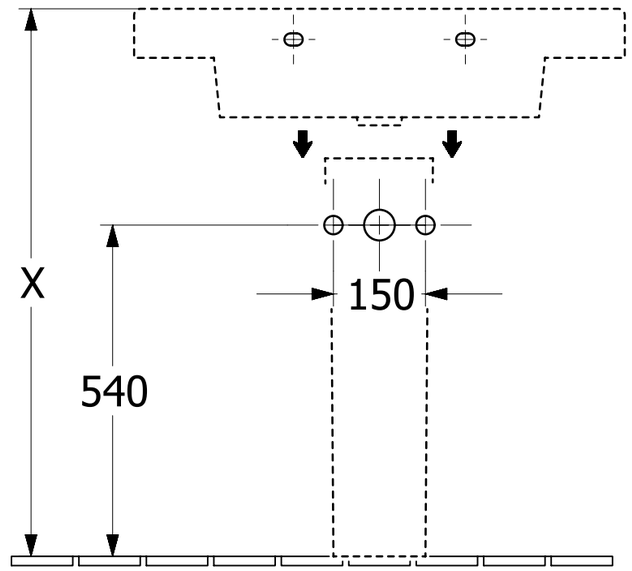

526500

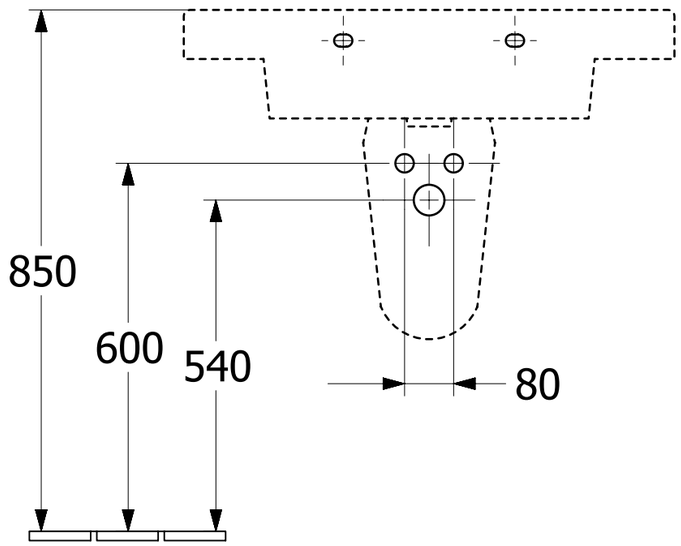

726400

Architectura 611680, 61168S 526500, 726400	Villeroy & Boch 1748
V03 / 18.05.2021	