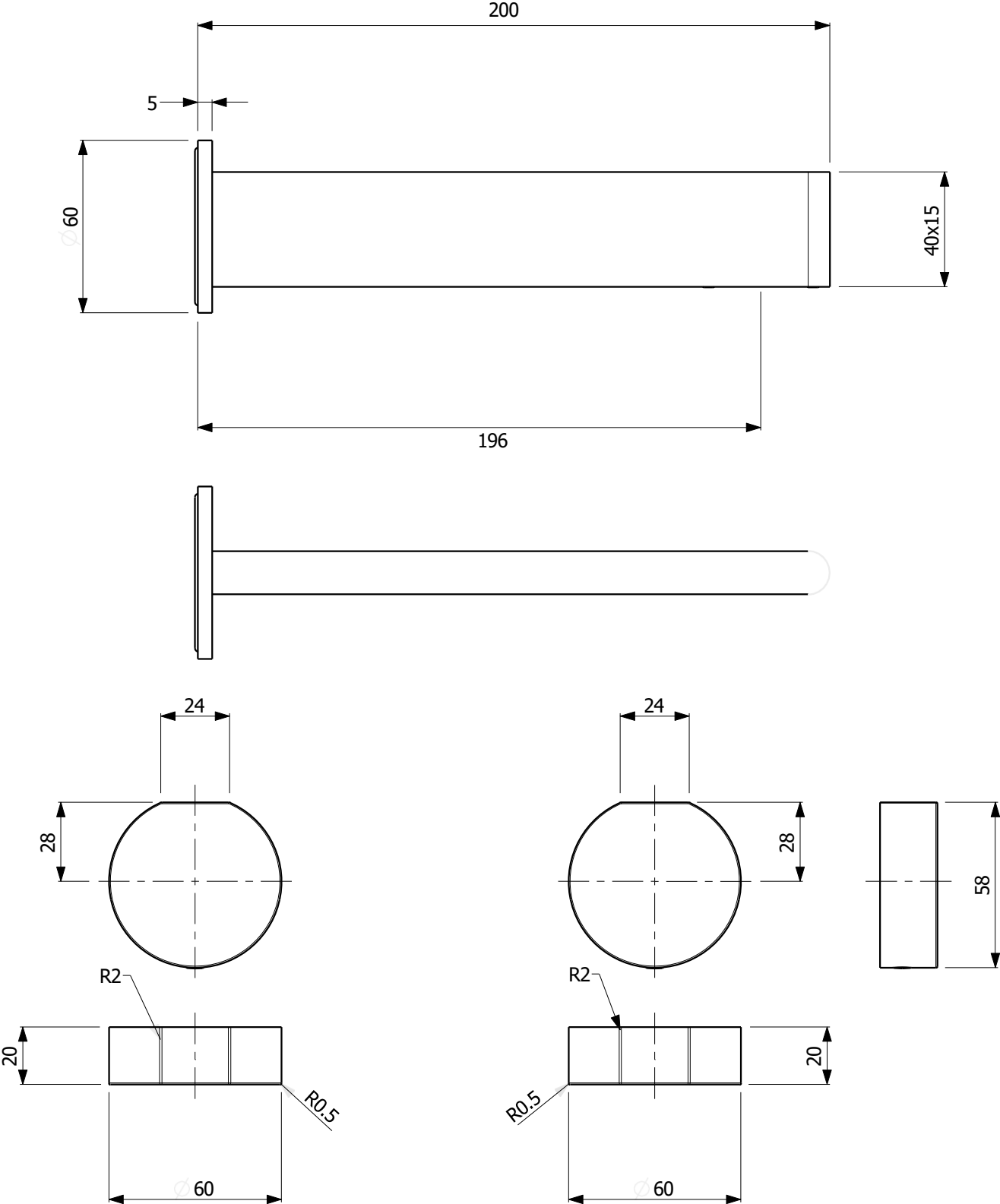
200
5
60
40x15
196
24
28
R2
20
R0.5
60
24
28
R2
20
R0.5
60
58