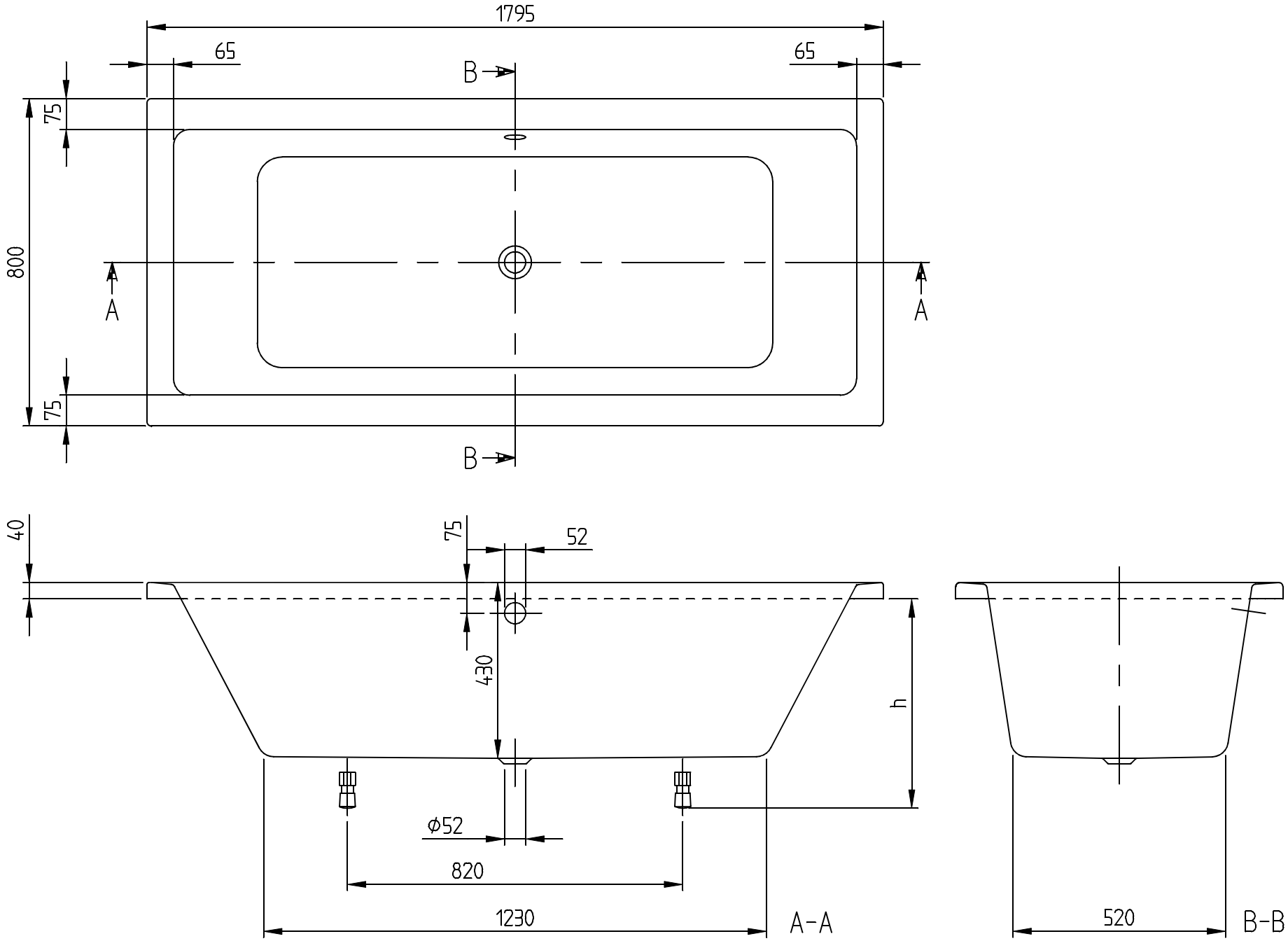

NEWO DUO 1800x800 UBA180TAR2	Villeroy & Boch 1748
V01/ 04-03-2022	