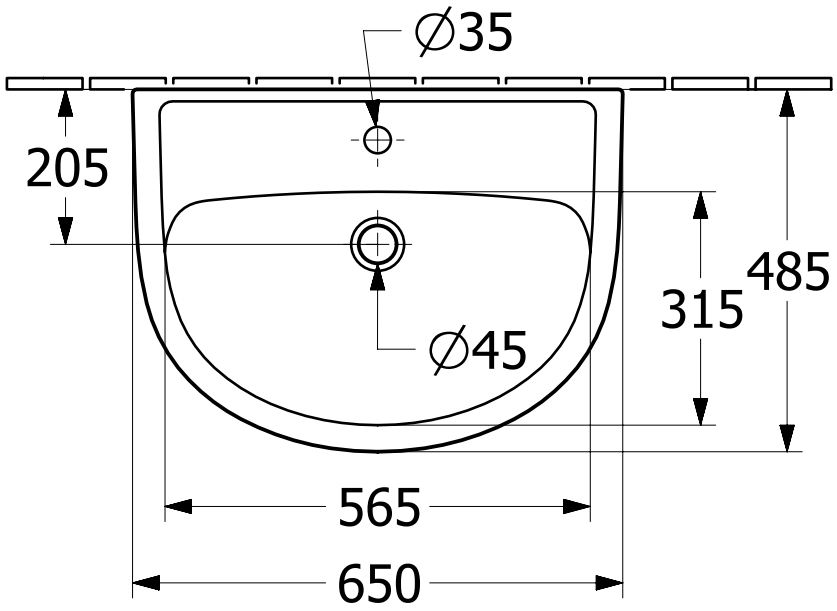

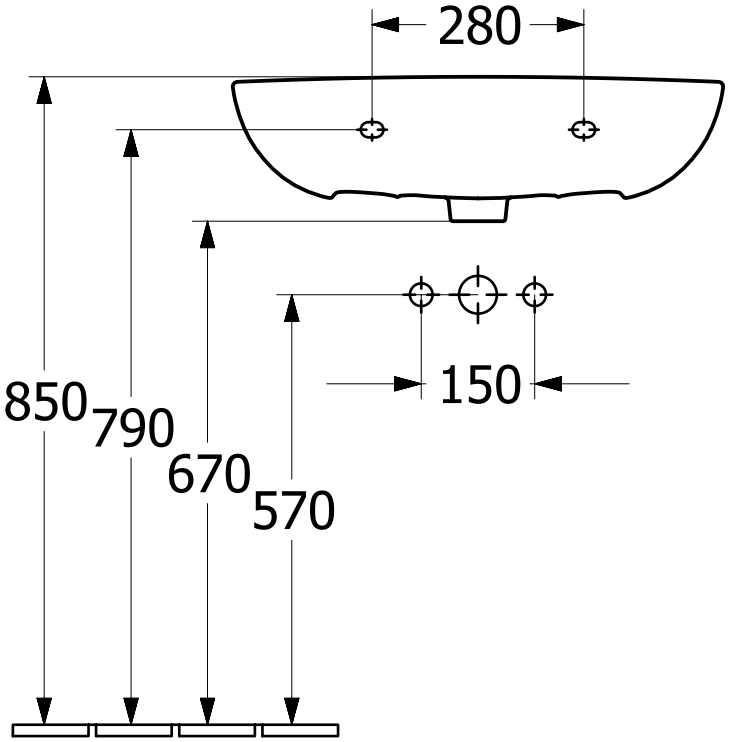

Newo 4A9165	Villeroy & Boch 1748
V04 / 16.08.2021	