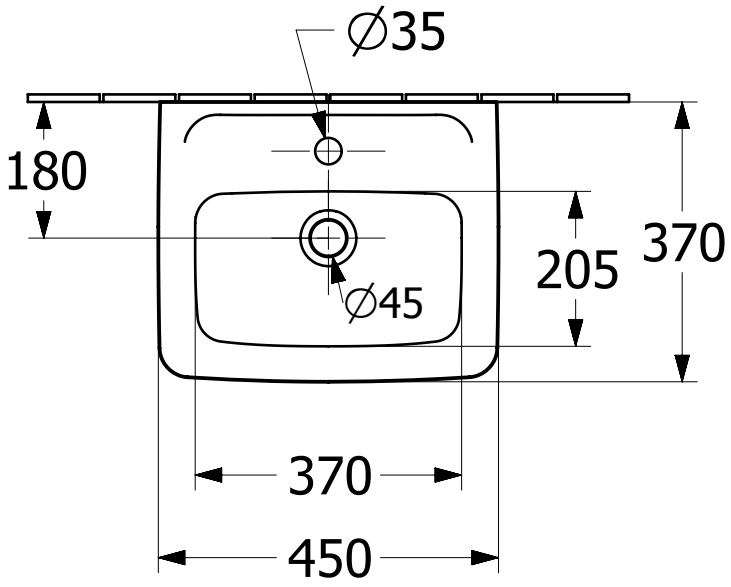

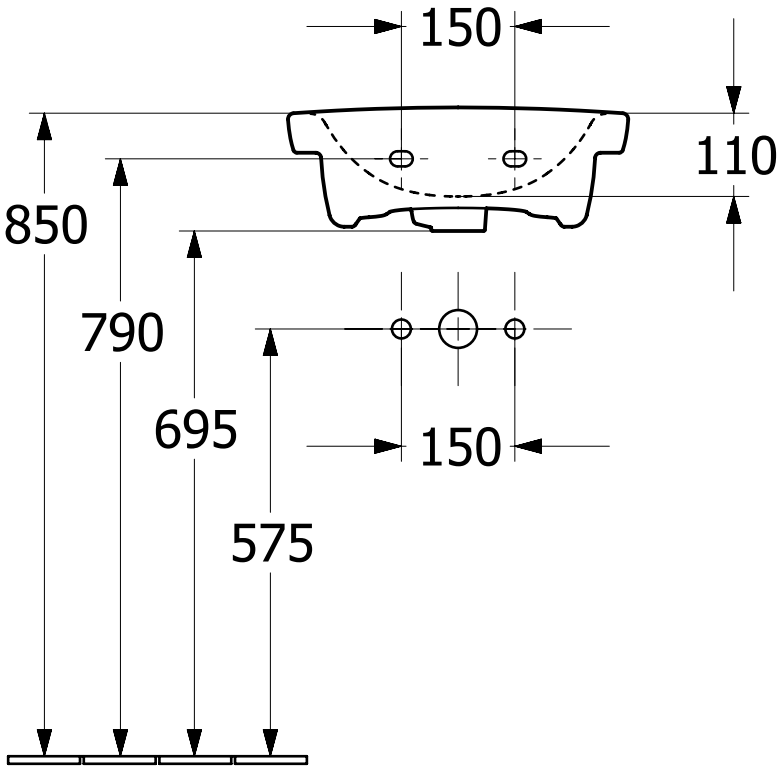

Newo 439245	Villeroy & Boch 1748
V05 / 12.07.2021	