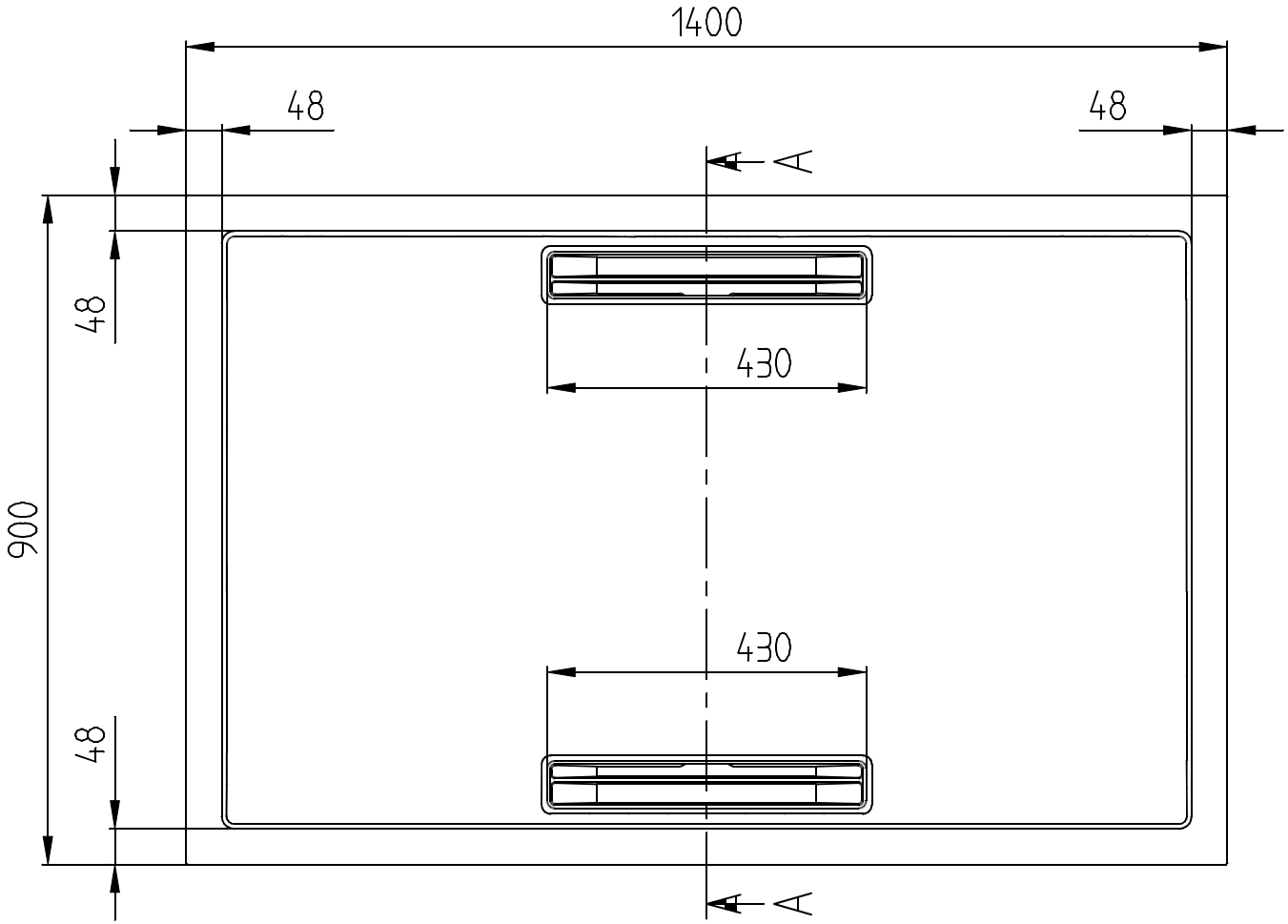

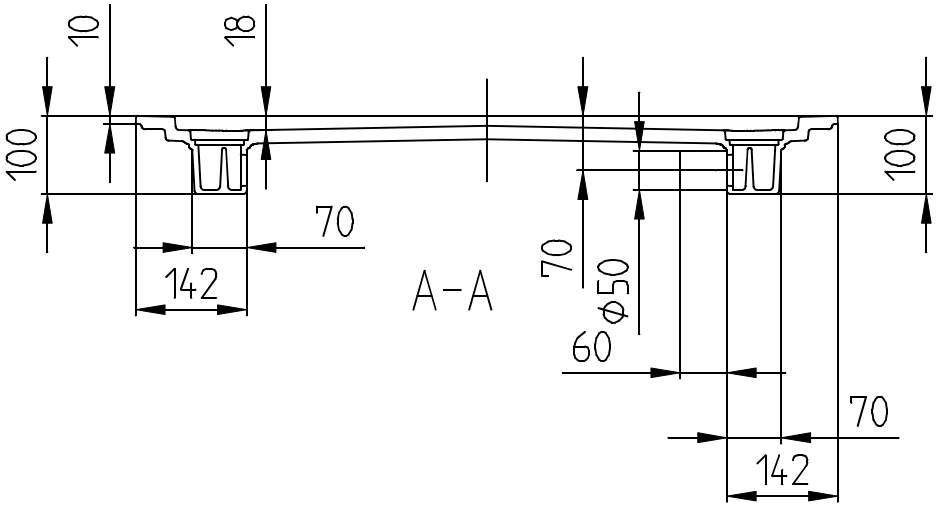

SQUARO SUPER FLAT 1400x900 UDQ1490SQR2	Villeroy & Boch 1748
V02 / 14-05-2020	