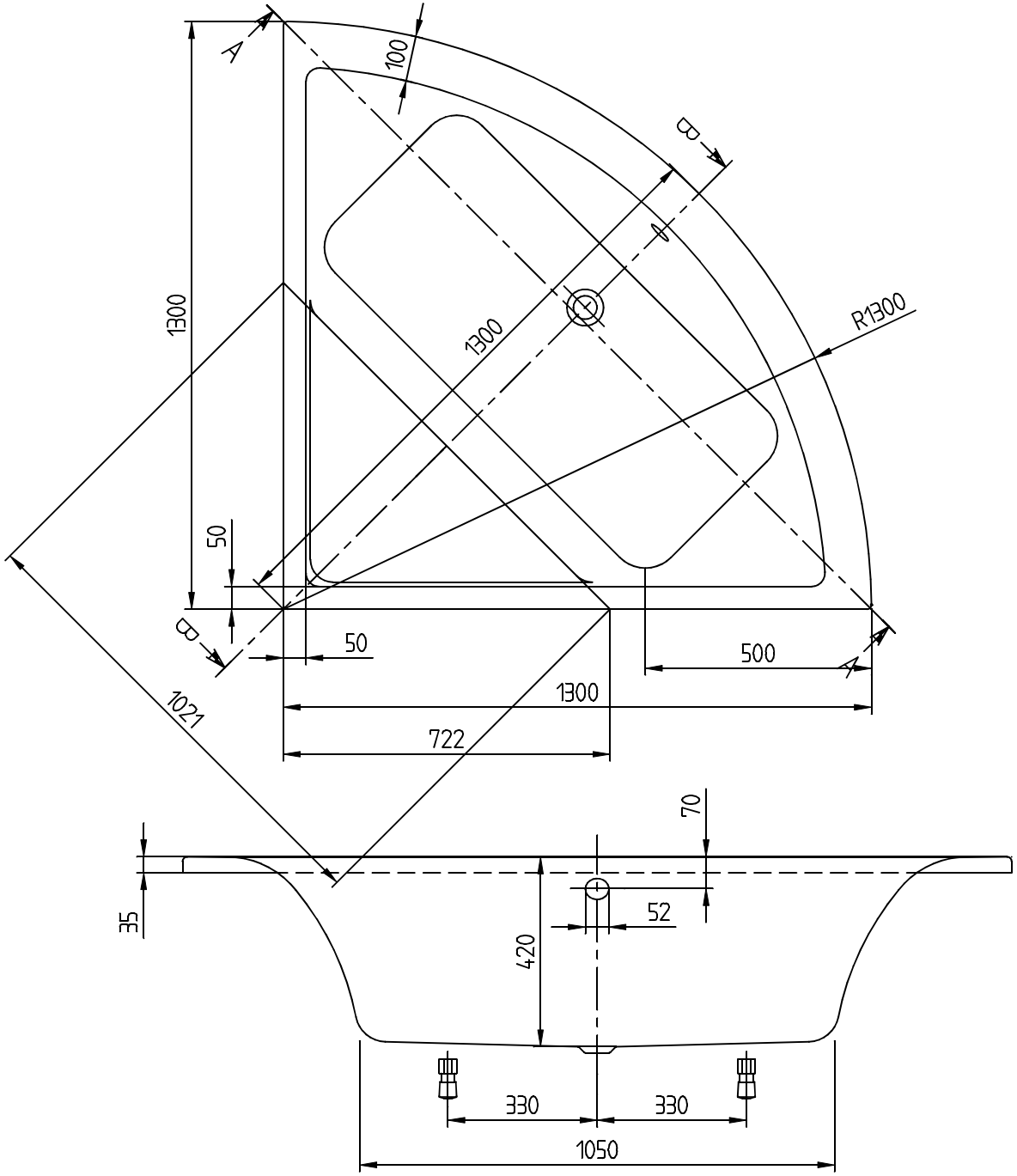

A-A

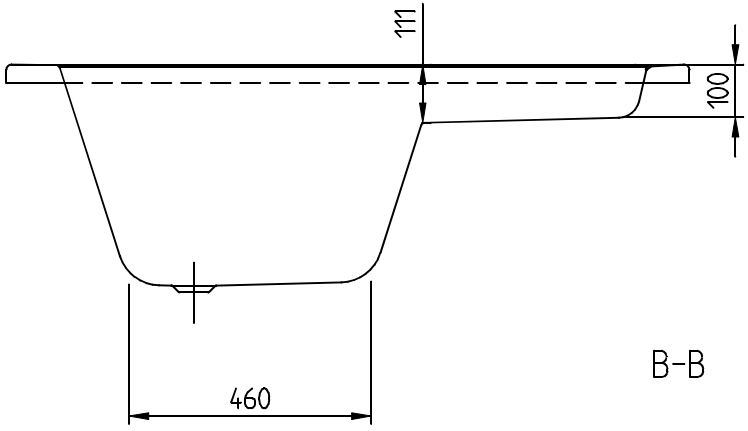

B-B

SUBWAY 1300x1300 UBA130SUB3	Villeroy & Boch 1748
V02/ 20-04-2020	