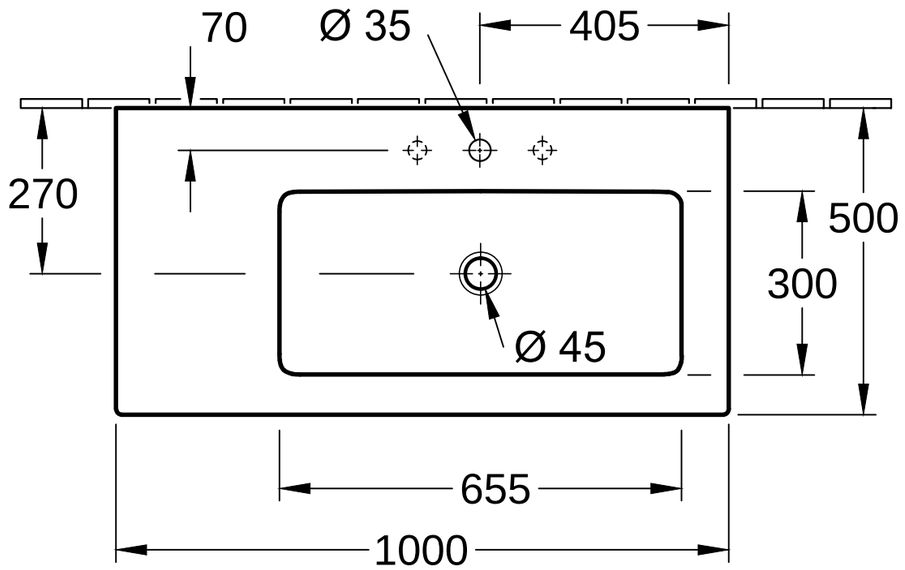


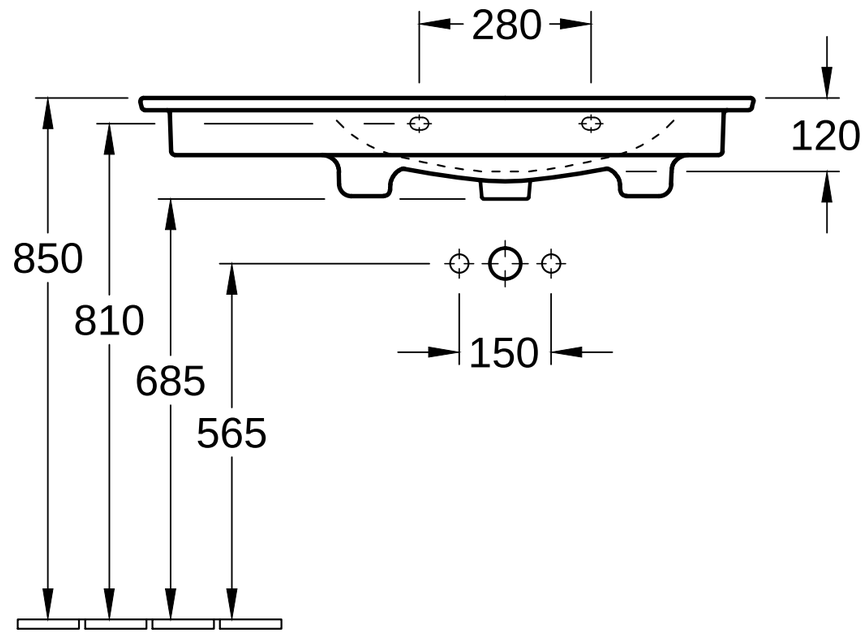


| | |
|---|---|
| VENTICELLO<br>4134 R1 / R2 / R3 | Villeroy & Boch<br>1748 |
| V02 / 05.09.2016 | |