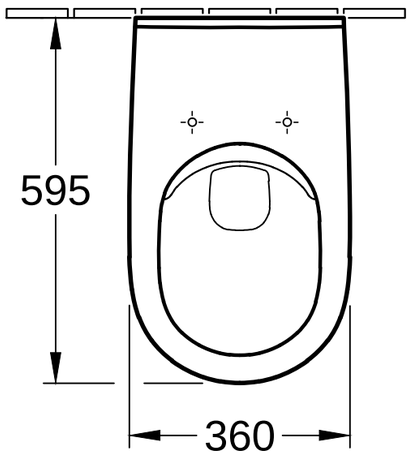

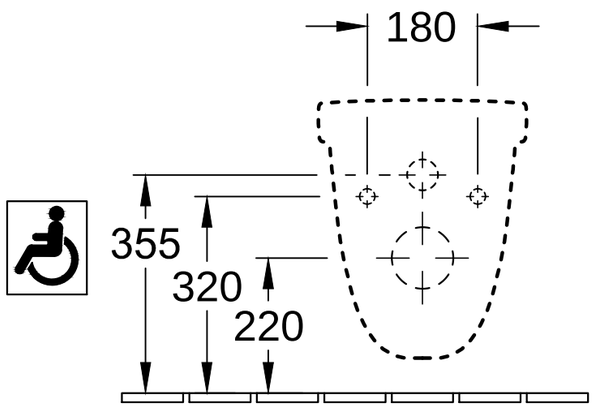

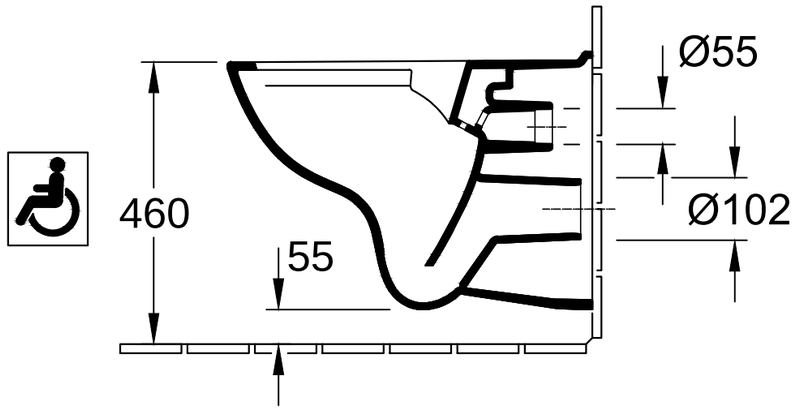

ViCare 469576	Villeroy & Boch 1748
V01/ 20.10.2020	