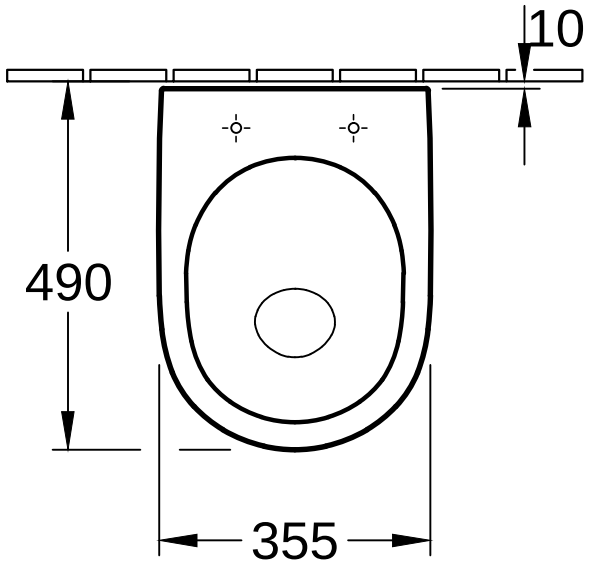

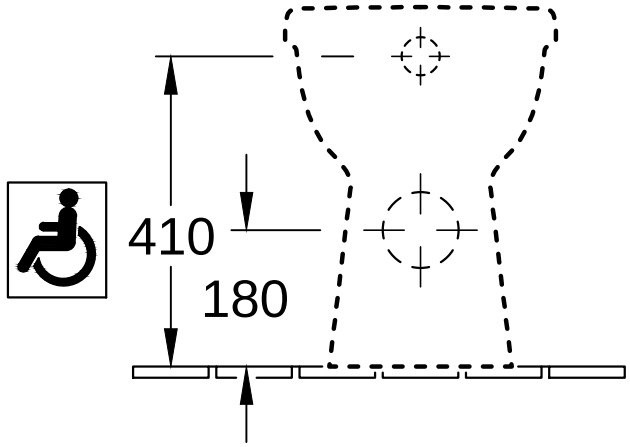

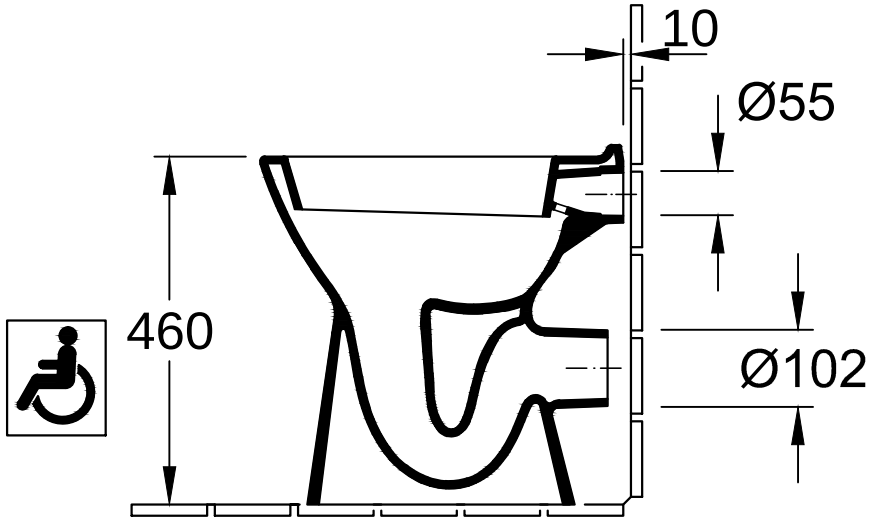

ViCare 468410	Villeroy & Boch 1748
V01 / 20.10.2020	