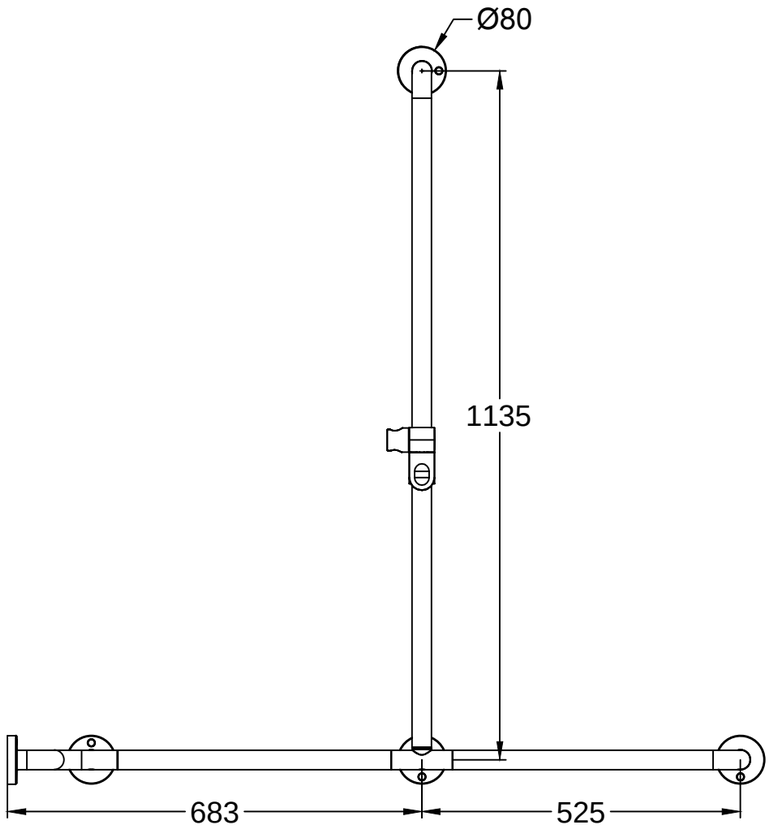

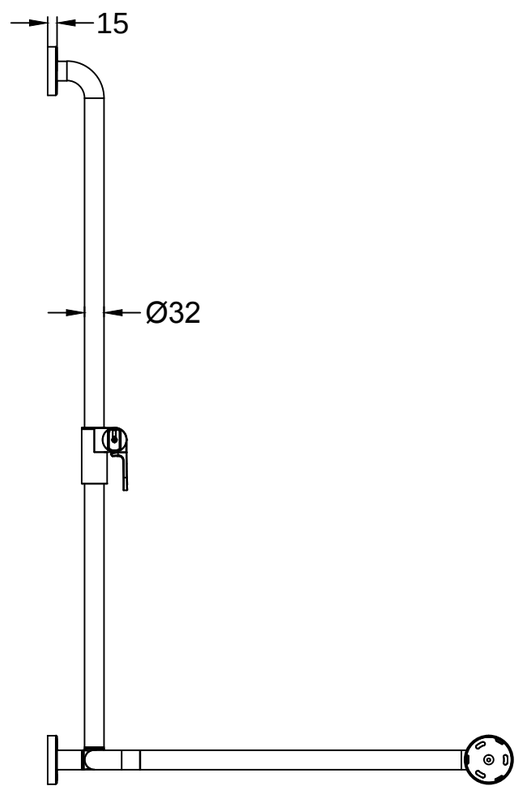

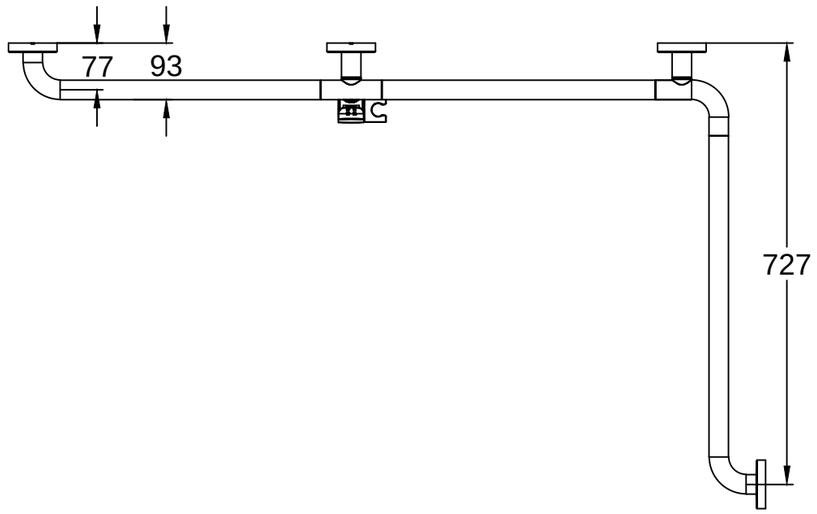

ViCare 92173168	Villeroy & Boch 1748
V01 / 27.10.2020	