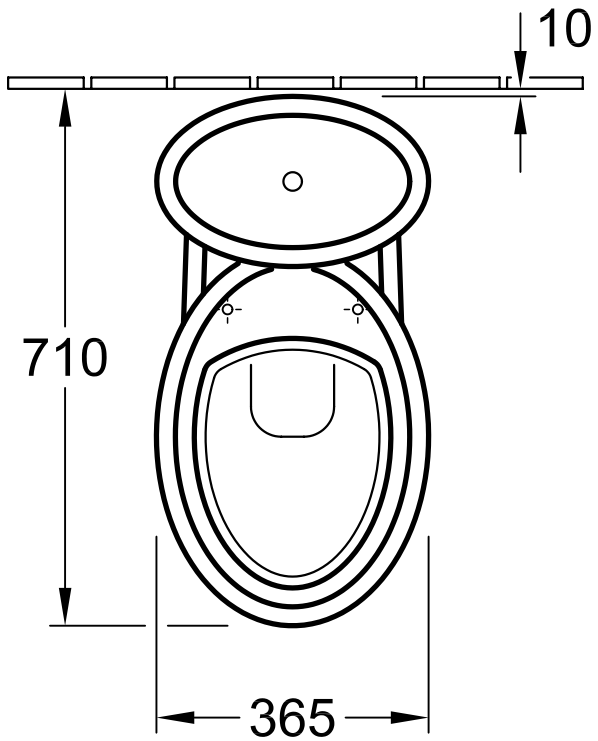

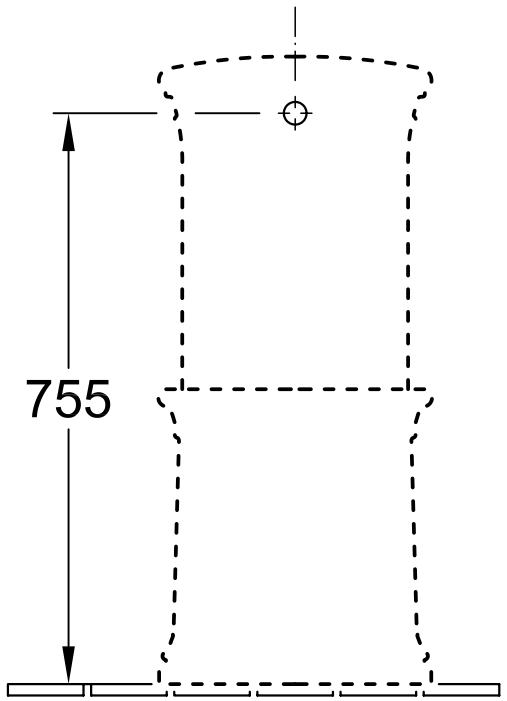

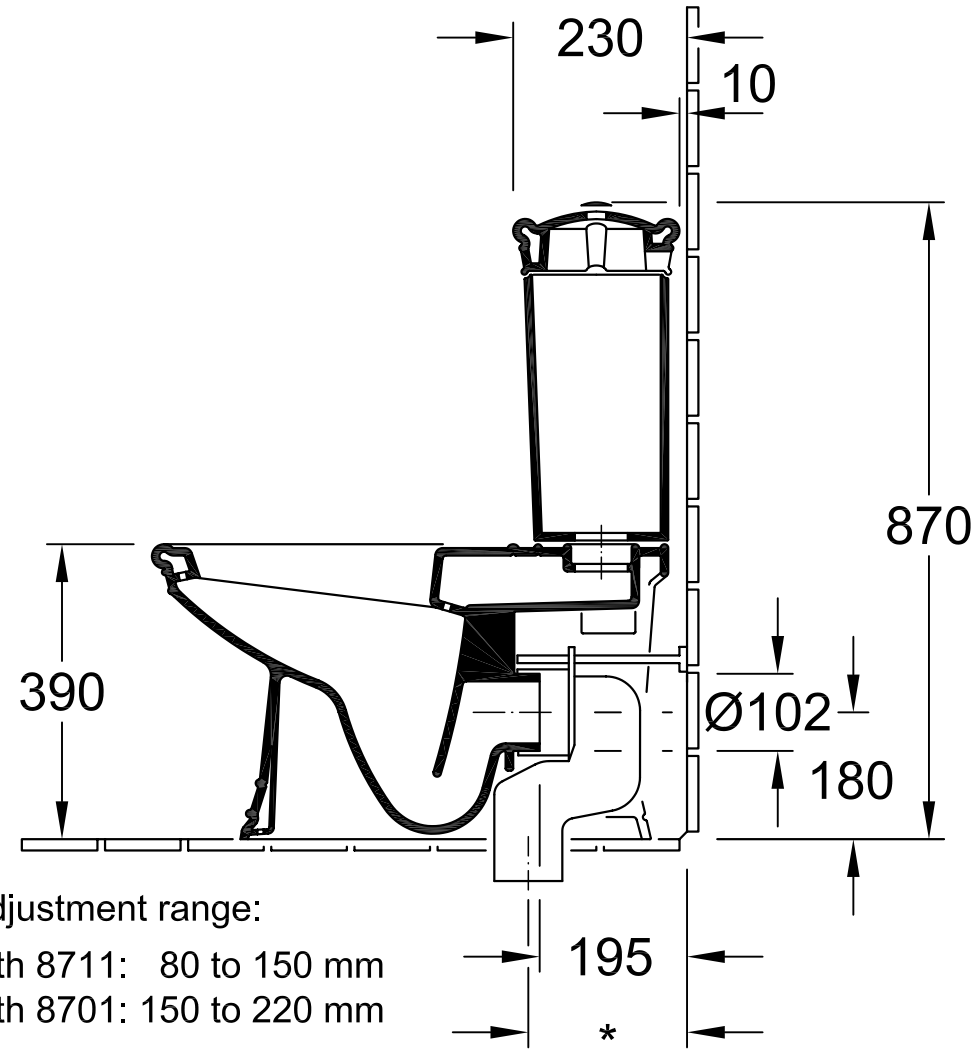

* Adjustment range:

with 8711: 80 to 150 mm
with 8701: 150 to 220 mm

Designation AMADEA 7695 10 - Close-coupled WC-suite 7795 11 - Cistern			Villeroy&Boch
Altered:	09. 2006	Scale: 1 : 10	This drawing may not be copied or passed on to third parties or competitive companies without our permission. Villeroy & Boch accepts no liability whatsoever for these data and technical drawings. Other parties use them at their own risk. The dimensions indicated are not binding. Villeroy & Boch reserves the right to make product changes.
		Signed: J. Zapp	
		Date: 06. 1999	