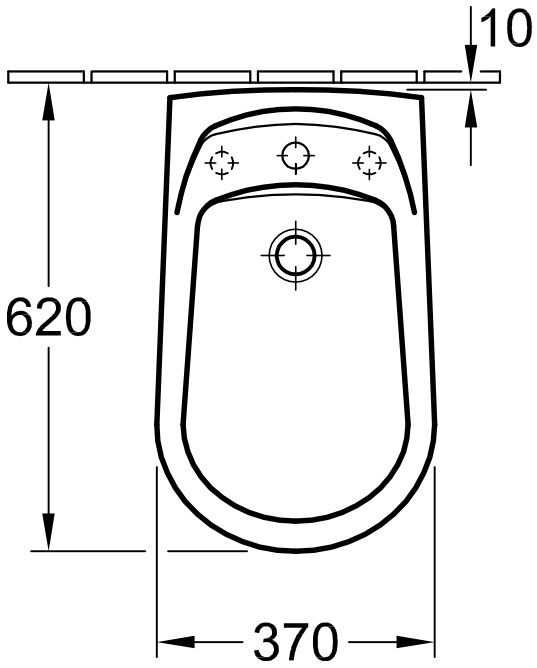

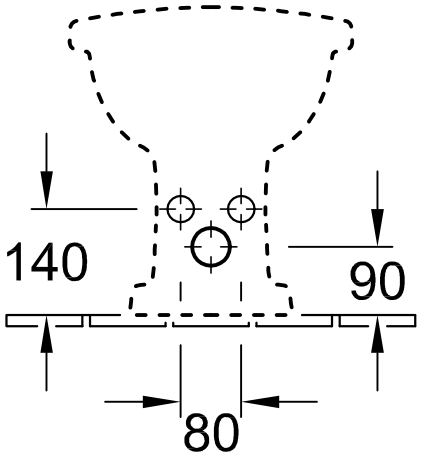

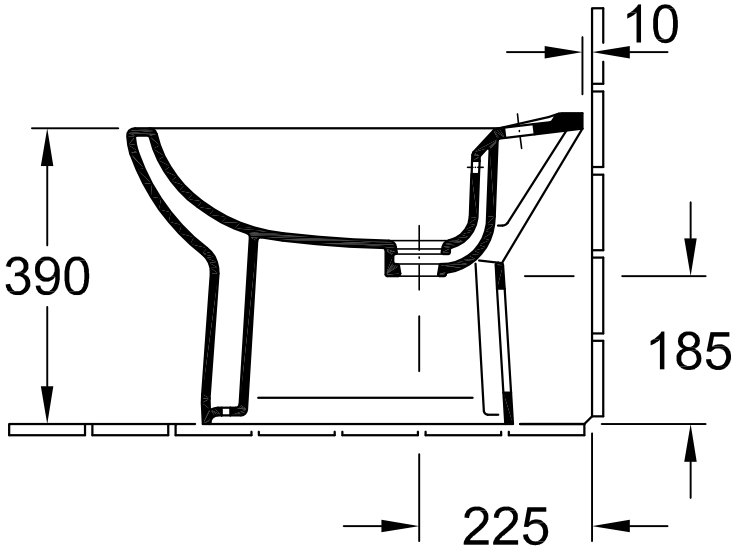

Designation

OMNIA - classic

7419 00 - Bidet

Villeroy&Boch

Altered:	10. 2007	Scale:	1 : 10
	07.07.2010		
		Signed:	Zapp
		Date:	Aug. 1998

This drawing may not be copied or passed on to third parties or competitive companies without our permission. Villeroy & Boch accepts no liability whatsoever for these data and technical drawings. Other parties use them at their own risk. The dimensions indicated are not binding. Villeroy & Boch reserves the right to make product changes.