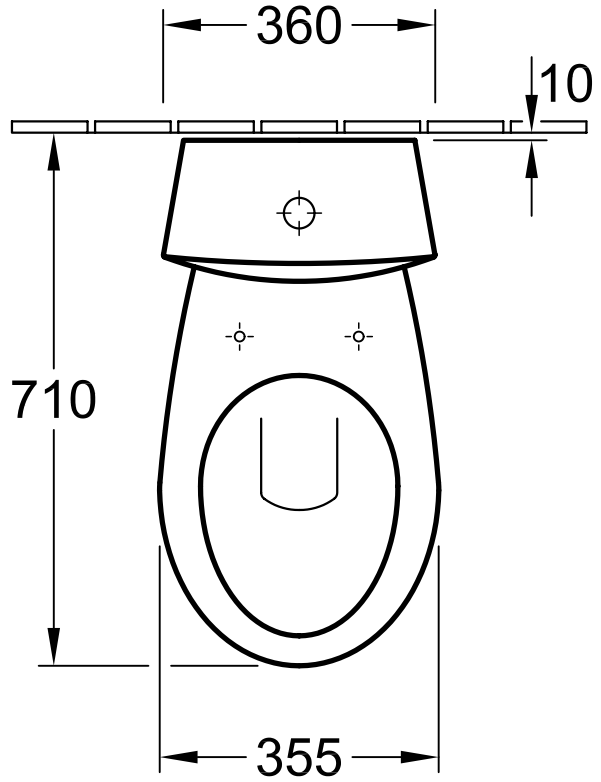

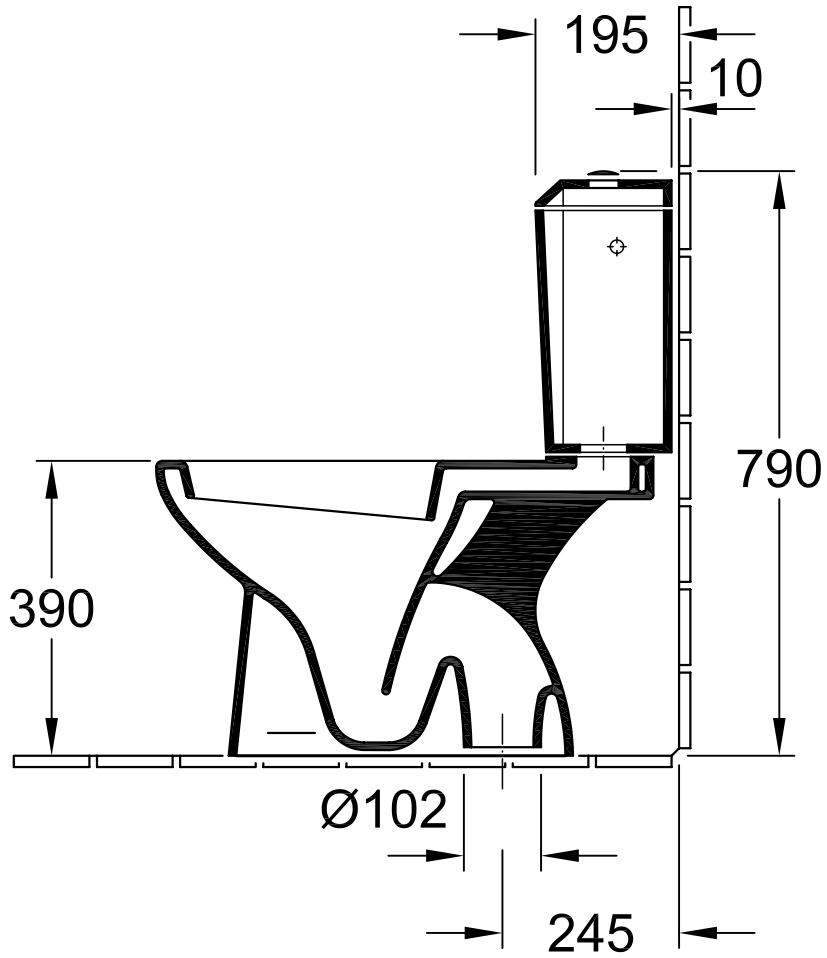

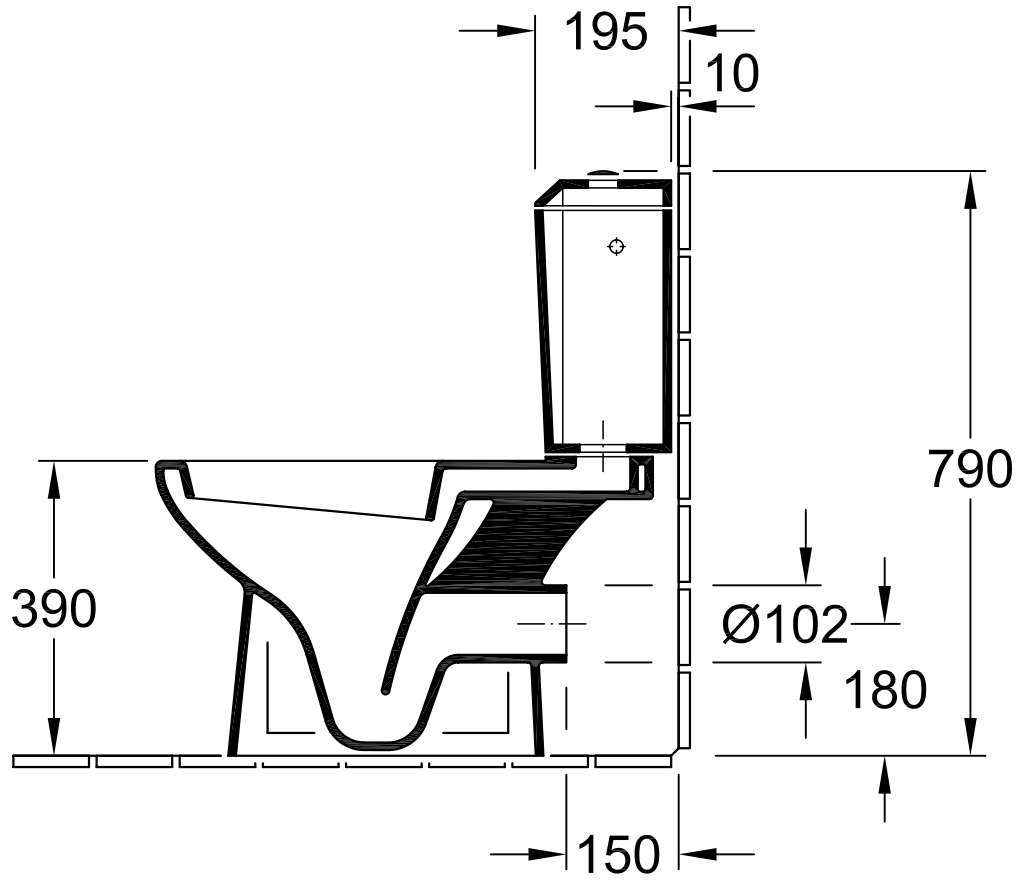

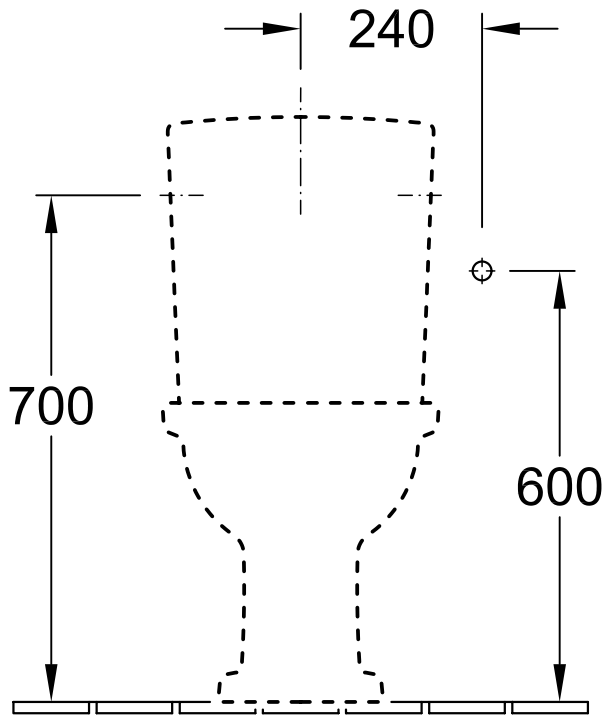

Inlet on both sides

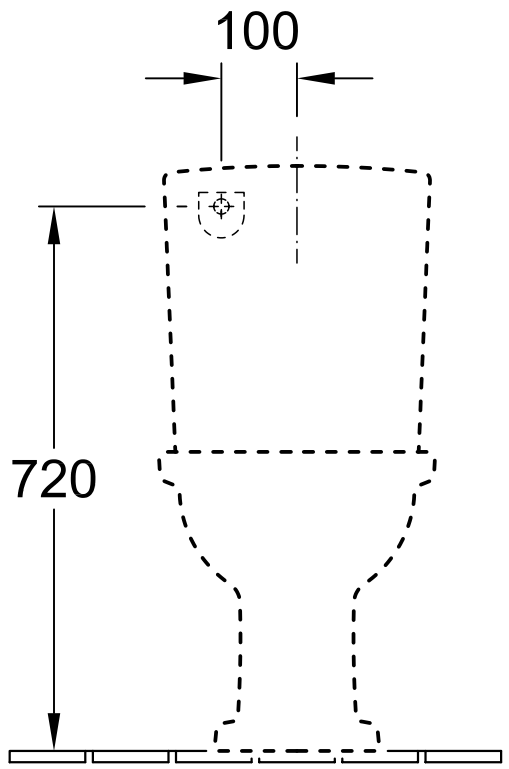

Rear inlet on left

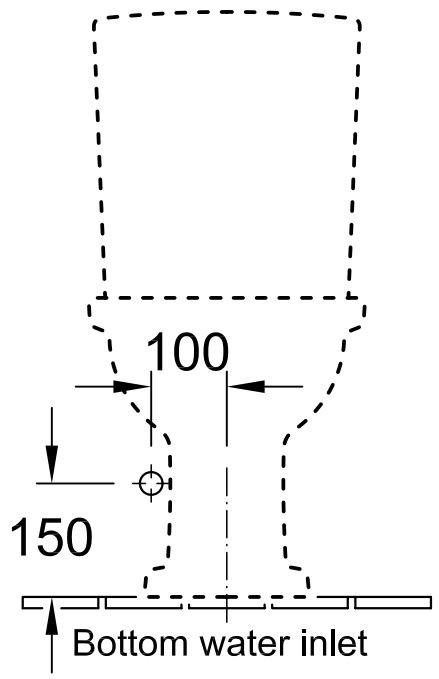

Bottom water inlet

Designation

OMNIA - classic

7617 01/10 C2027

7796 11 - Cistern / 7796 A1 - Cistern

Villeroy&Boch

Altered:	Sept. 19 02 RH	Scale:	1 : 10
		Signed:	J. Zapp
		Date:	Dec. 1998

This drawing may not be copied or passed on to third parties or competitive companies without our permission. Villeroy & Boch accepts no liability whatsoever for these data and technical drawings. Other parties use them at their own risk. The dimensions indicated are not binding. Villeroy & Boch reserves the right to make product changes.