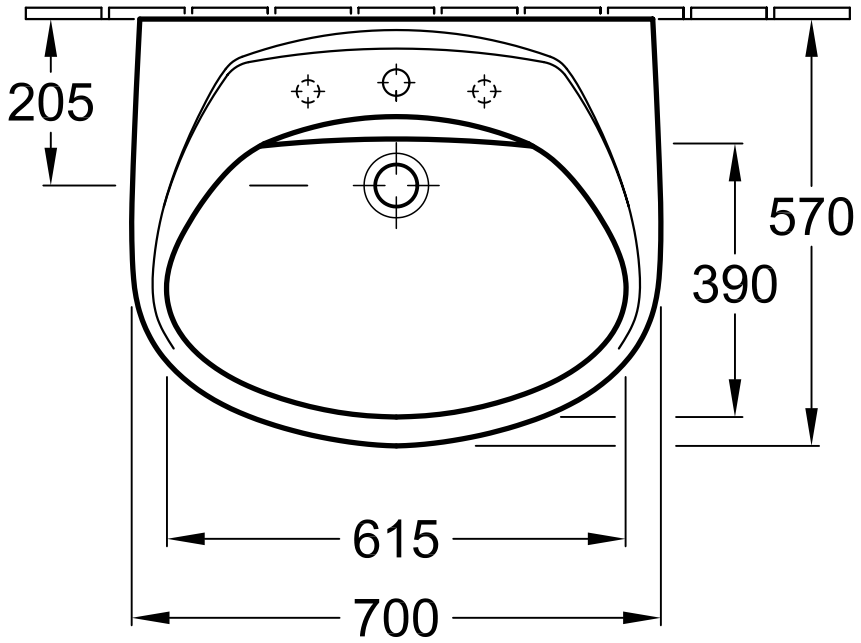

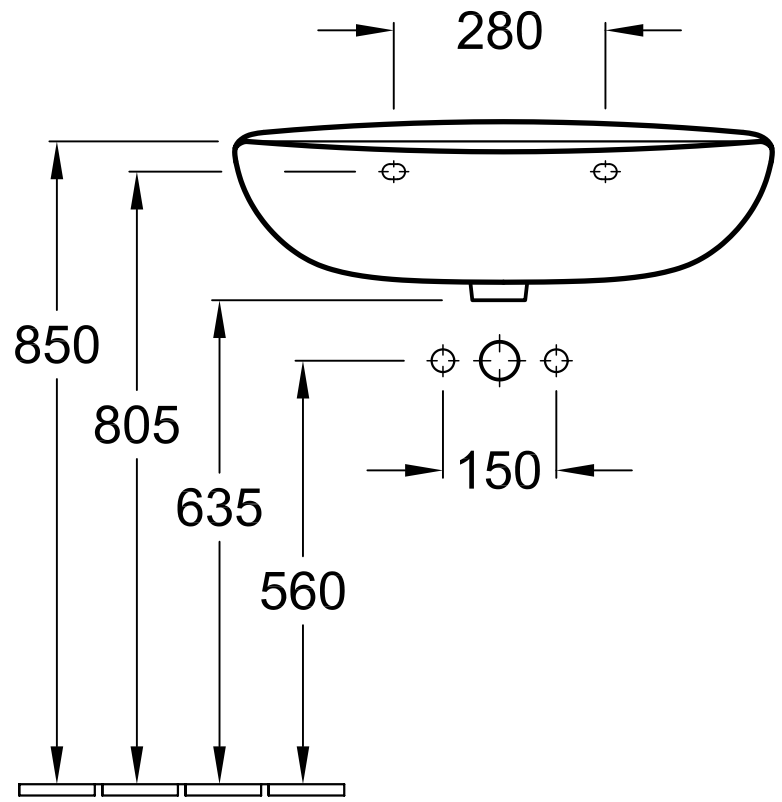

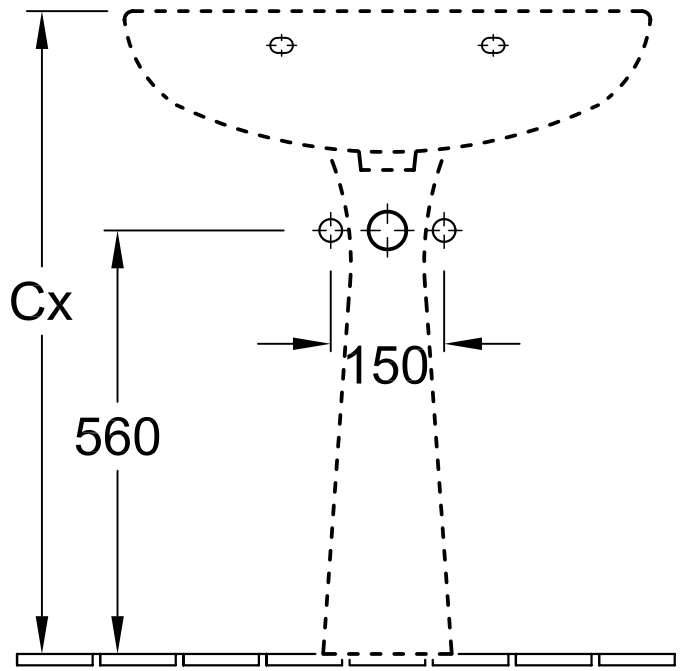

Position pedestal to determine Cx

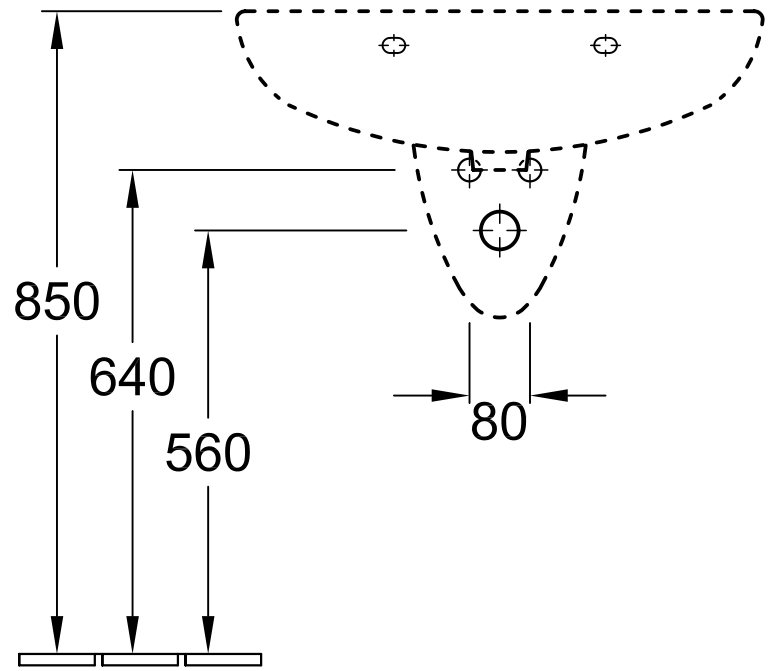

Designation OMNIA - classic 7122 70 - Washbasin			Villeroy&Boch
Altered:	Sept. 19 02 RH	Scale: 1 : 10	This drawing may not be copied or passed on to third parties or competitive companies without our permission. Villeroy & Boch accepts no liability whatsoever for these data and technical drawings. Other parties use them at their own risk. The dimensions indicated are not binding. Villeroy & Boch reserves the right to make product changes.
		Signed: Thewes	
		Date: Aug. 1998	