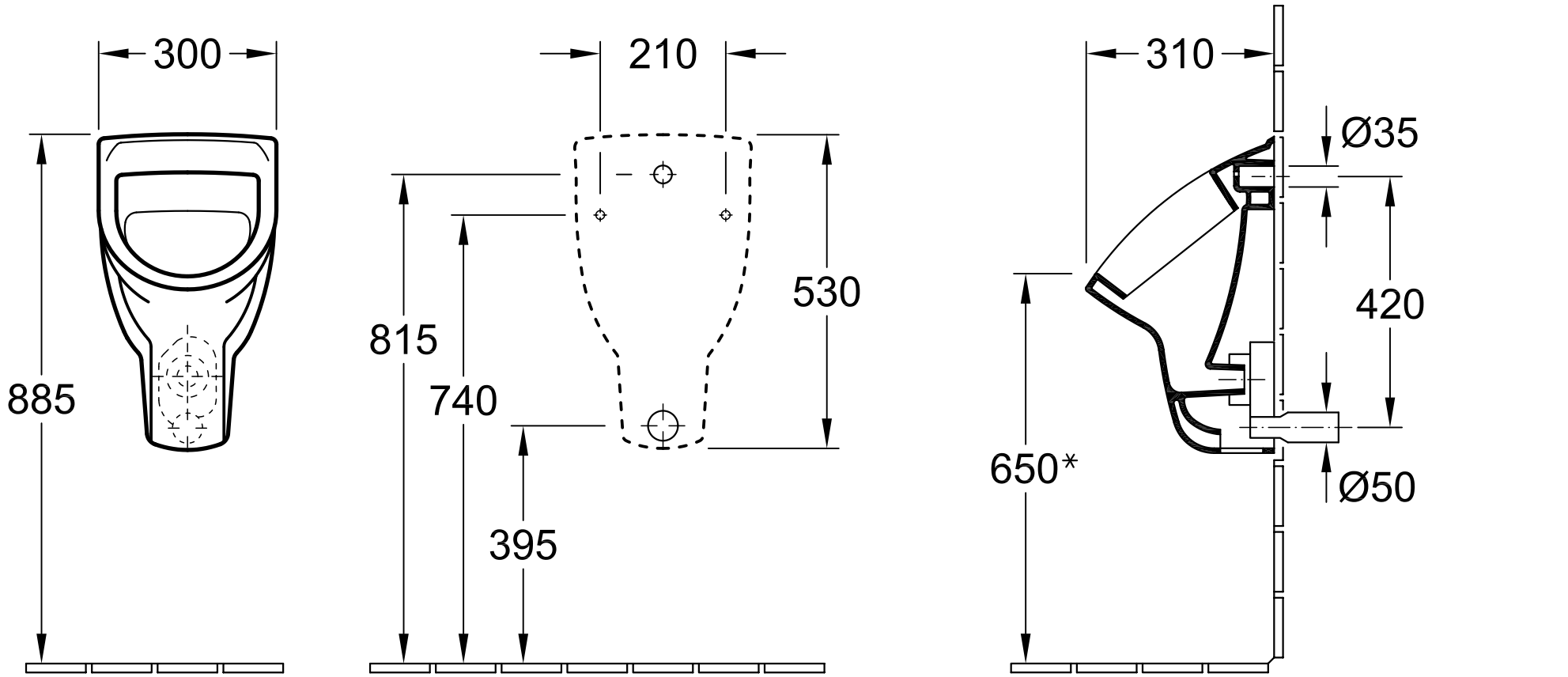

* We recommend installation at a height suitable for the average user.

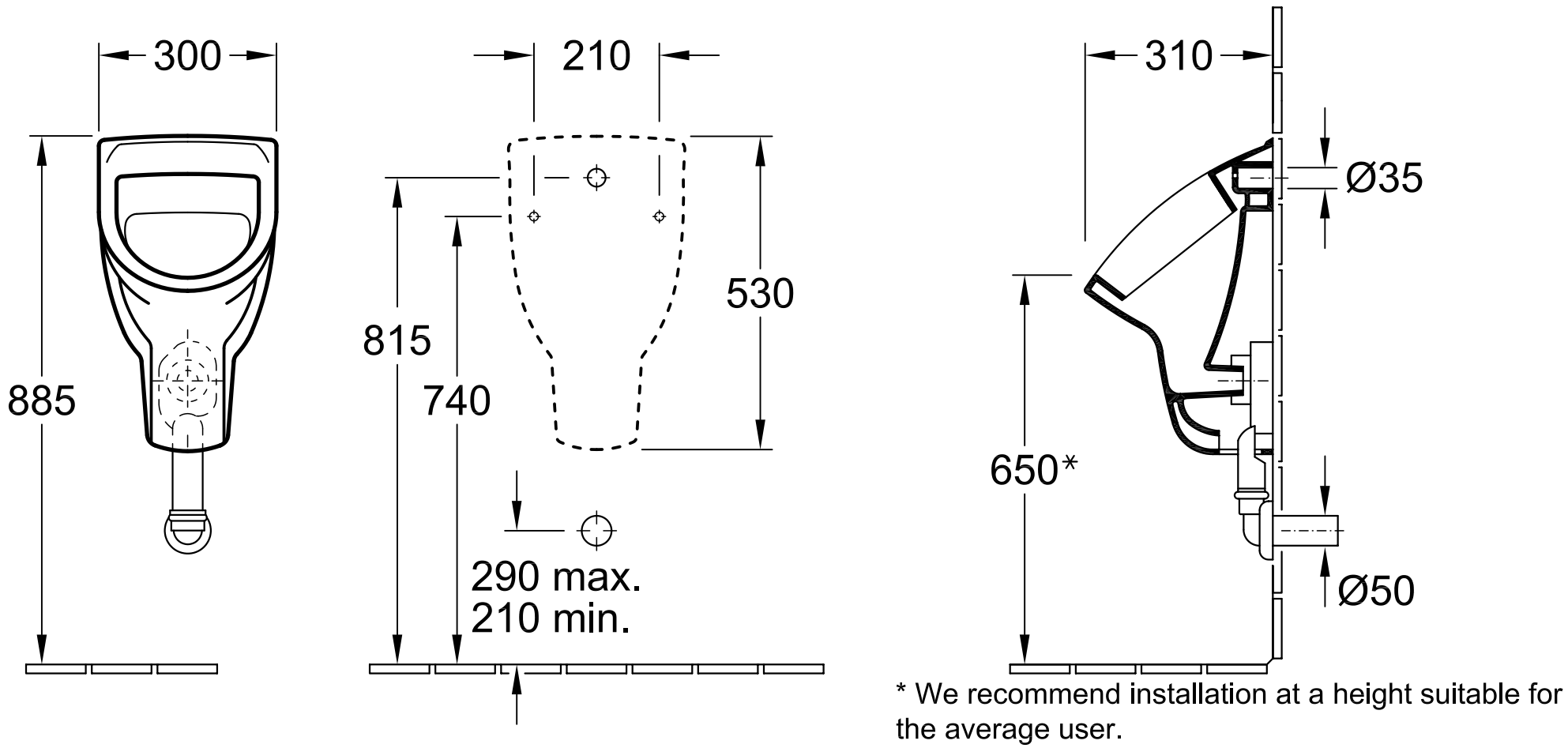

* We recommend installation at a height suitable for the average user.

Designation OMNIA - classic 7527 - Siph. urinal hor. / ver. outlet			Villeroy&Boch
Altered:	Sept. 19 02 RH	Scale: 1 : 10	This drawing may not be copied or passed on to third parties or competitive companies without our permission. Villeroy & Boch accepts no liability whatsoever for these data and technical drawings. Other parties use them at their own risk. The dimensions indicated are not binding. Villeroy & Boch reserves the right to make product changes.
		Signed: J. Zapp	
		Date: 11. Sept. 1998	