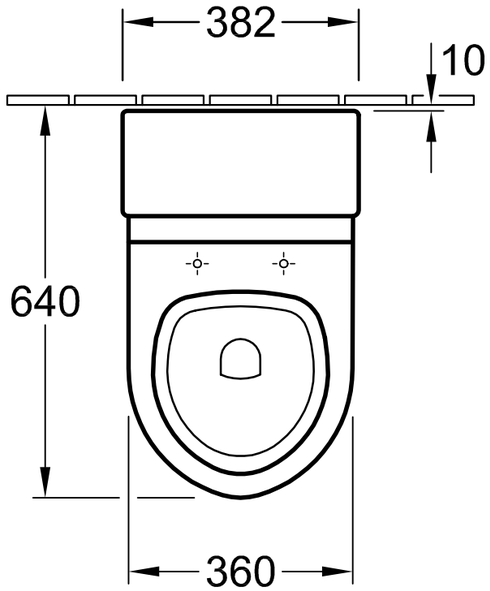

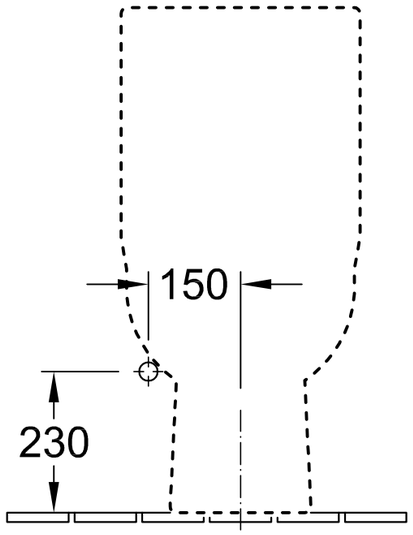

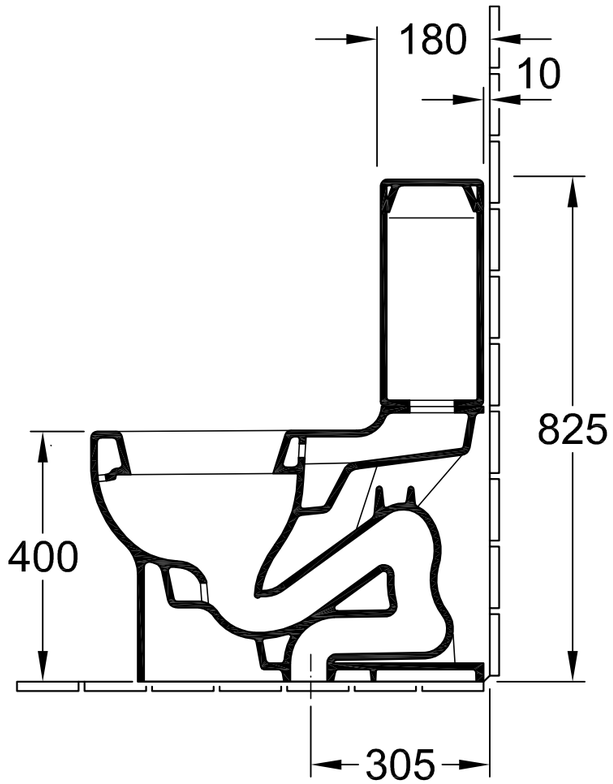

Note: Fixture dimensions meet ASME A112.19.2 requirements.
These measurements are subject to change or cancellation.
No responsibility will be assumed for use of superseded or voided pages.

Designation TWIST 5C04 01 WC Round Front 5D02 U1 TANK			Villeroy&Boch
Altered:	17.06.2010	Scale: 1 : 10	This drawing may not be copied or passed on to third parties or competitive companies without our permission. Villeroy & Boch accepts no liability whatsoever for these data and technical drawings. Other parties use them at their own risk. The dimensions indicated are not binding. Villeroy & Boch reserves the right to make product changes.
		Signed: L. Mendoza / RH	
		Date: 07. 2007	