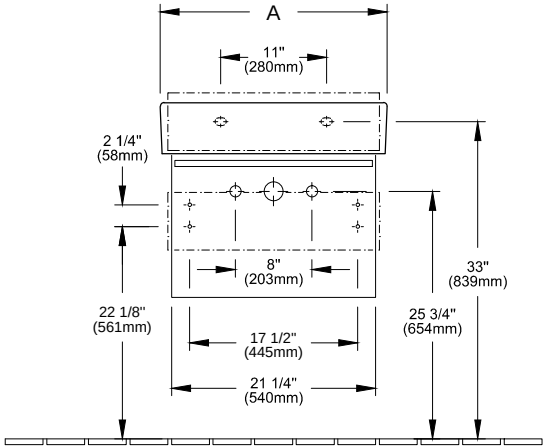

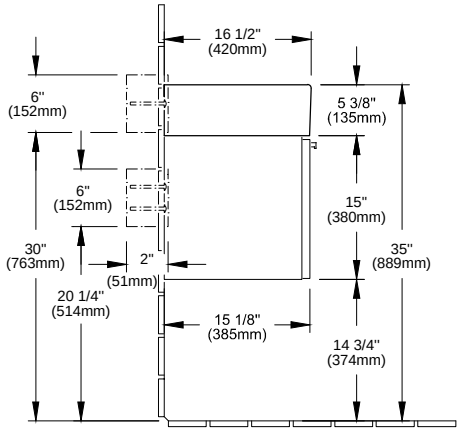

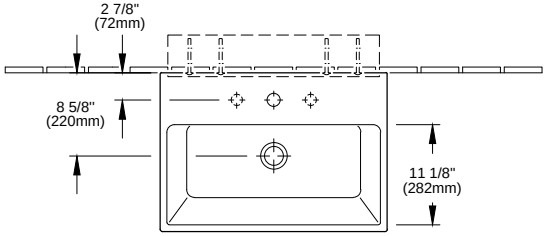

	A	
A292 U2 XX - 5133 U7/U6/UM	23 5/8"	600 mm

+ Indicate location for inwall support bracket

+ Dimensions taken from finished floor level

+ Sink not included

Wall mounting

The dimensions indicated are not binding.
Villeroy & Boch reserves the right to make product changes.

Dimensions in mm and Inch

Designation				Villeroy&Boch
Central Line				
Overview of furniture			A292U2XX	
Altered:		Scale:	1:20	This drawing may not be copied or passed on to third parties or competitive companies without our permission. Villeroy & Boch accepts no liability whatsoever for these data and technical drawings. Other parties use them at their own risk. The dimensions indicated are not binding. Villeroy & Boch reserves the right to make product changes.
		Signed:	BUBE	
		Date:	04.10.2012	