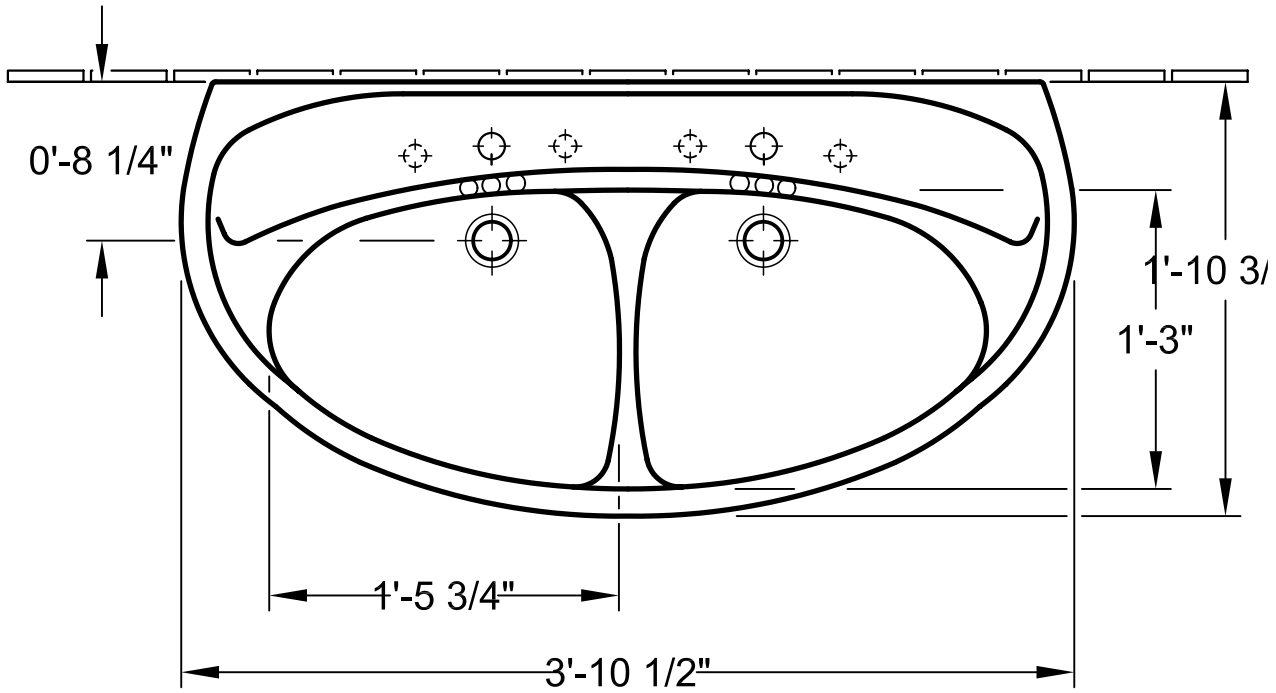
0'-8 1/4"
1'-10 3/
1'-3"
1'-5 3/4"
3'-10 1/2"

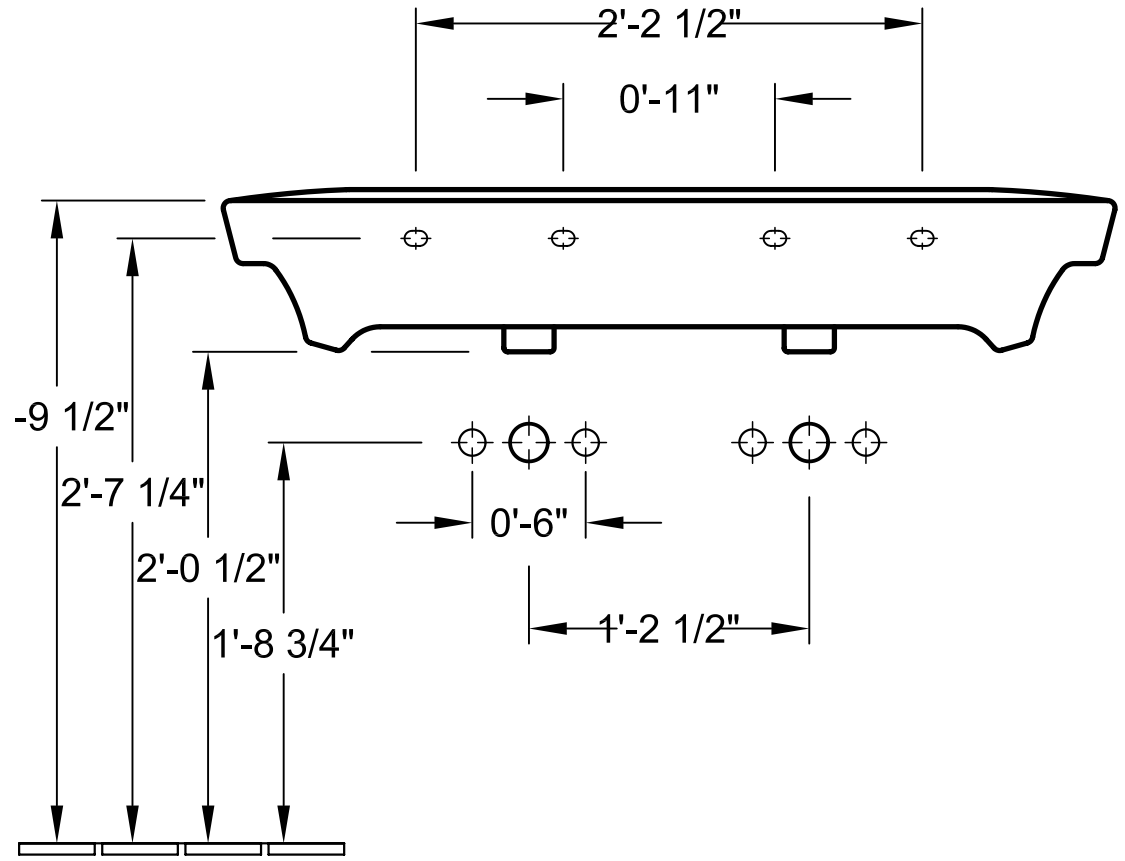
2'-2 1/2"
0'-11"
-9 1/2"
2'-7 1/4"
2'-0 1/2"
1'-8 3/4"
0'-6"
1'-2 1/2"

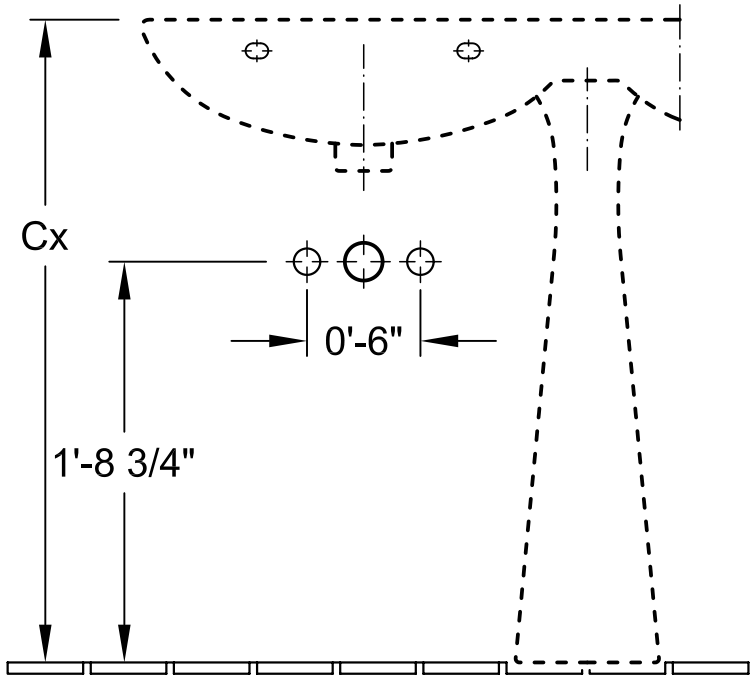
Cx
0'-6"
1'-8 3/4"

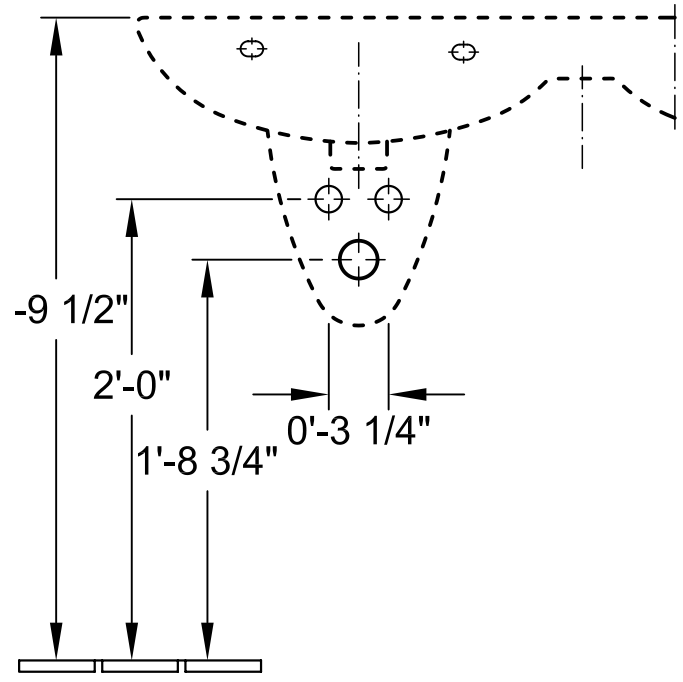
-9 1/2"
2'-0"
1'-8 3/4"
0'-3 1/4"

		1 : 10