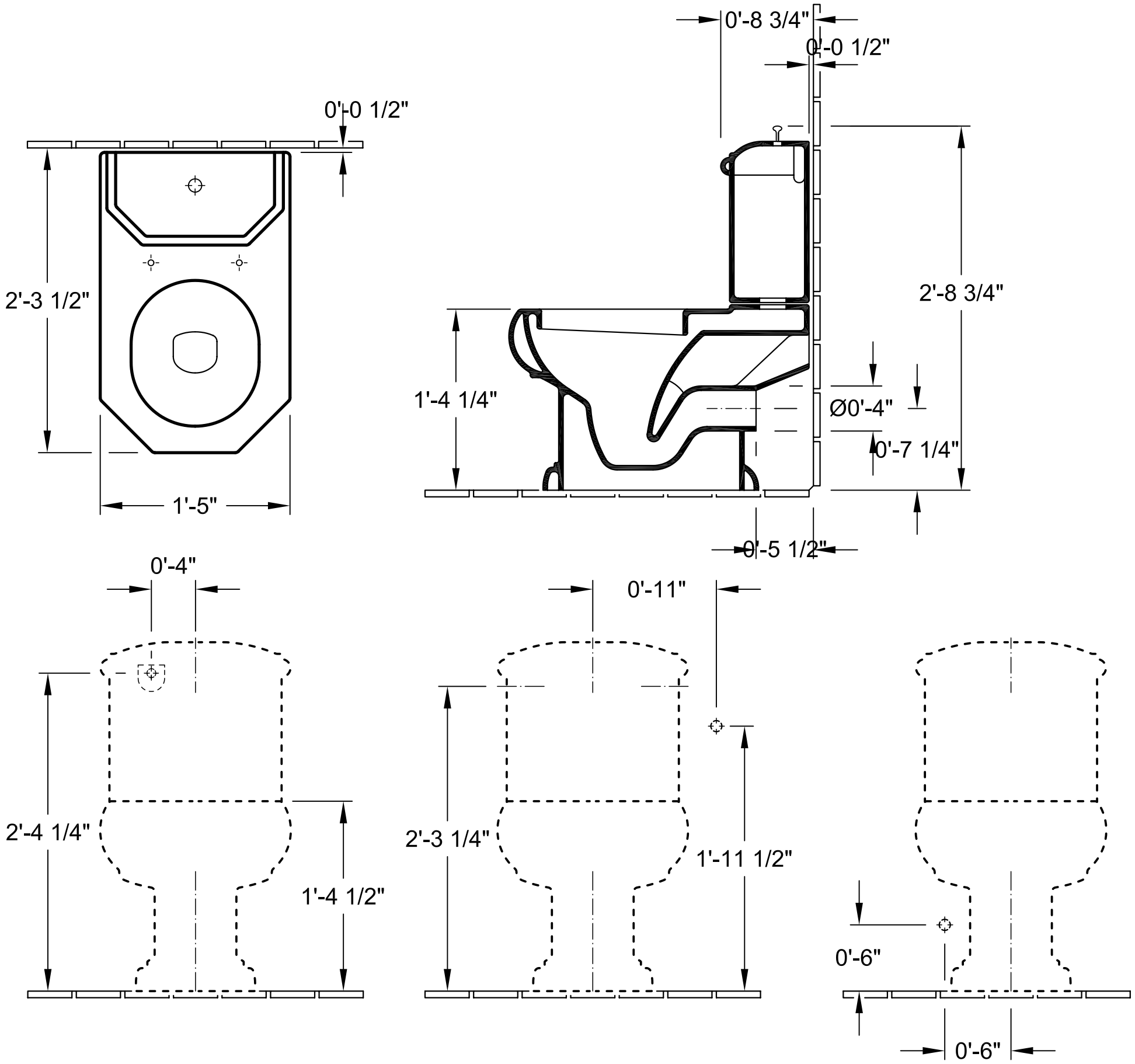
0'-0 1/2"
2'-3 1/2"
1'-5"
0'-8 3/4"
0'-0 1/2"
2'-8 3/4"
1'-4 1/4"
Ø0'-4"
0'-7 1/4"
0'-5 1/2"
0'-4"
2'-4 1/4"
1'-4 1/2"
0'-11"
2'-3 1/4"
1'-11 1/2"
0'-6"
0'-6"

1 : 10