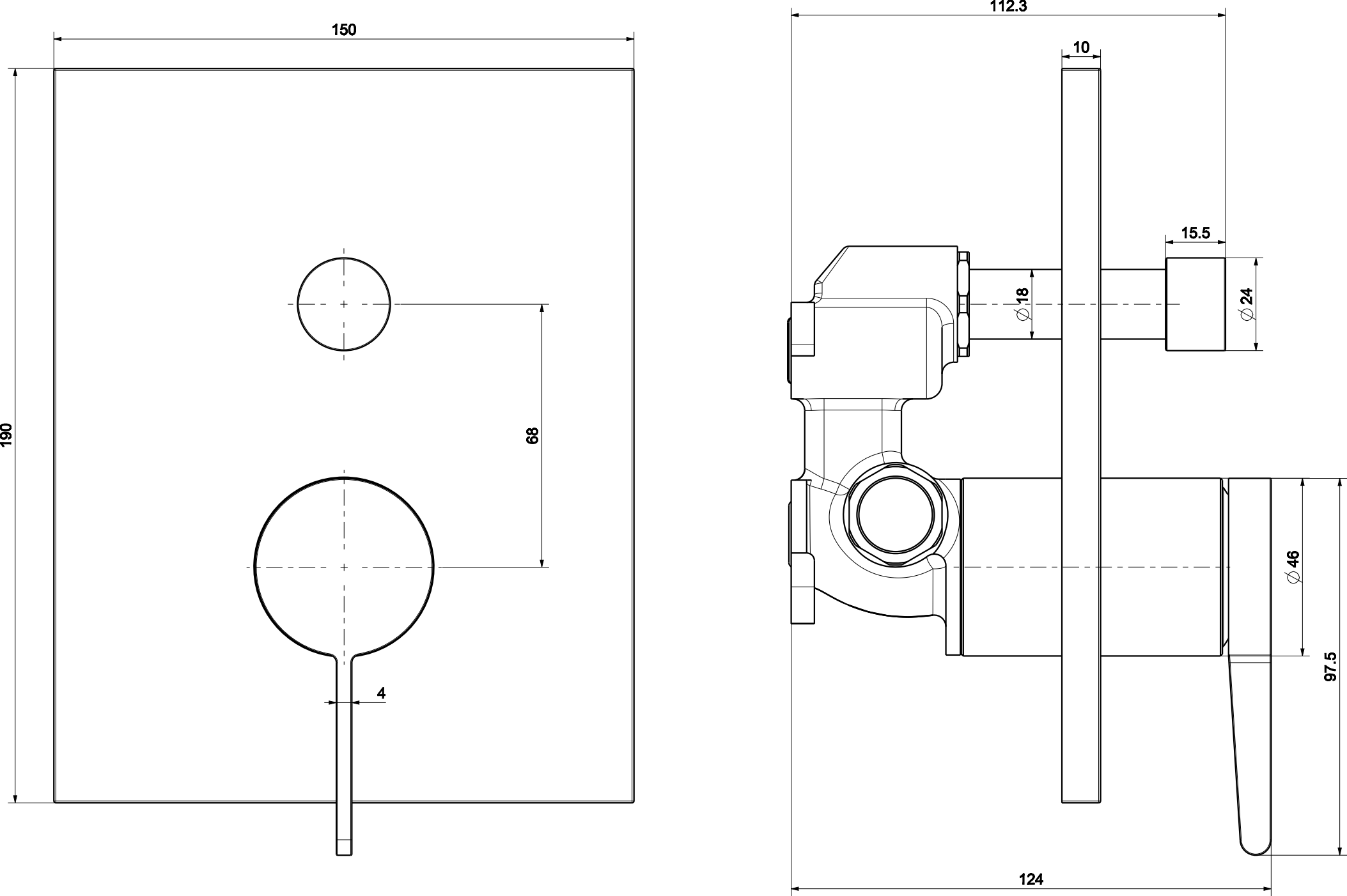
150
190
68
4
112.3
10
15.5
⌀18
⌀24
⌀46
97.5
124