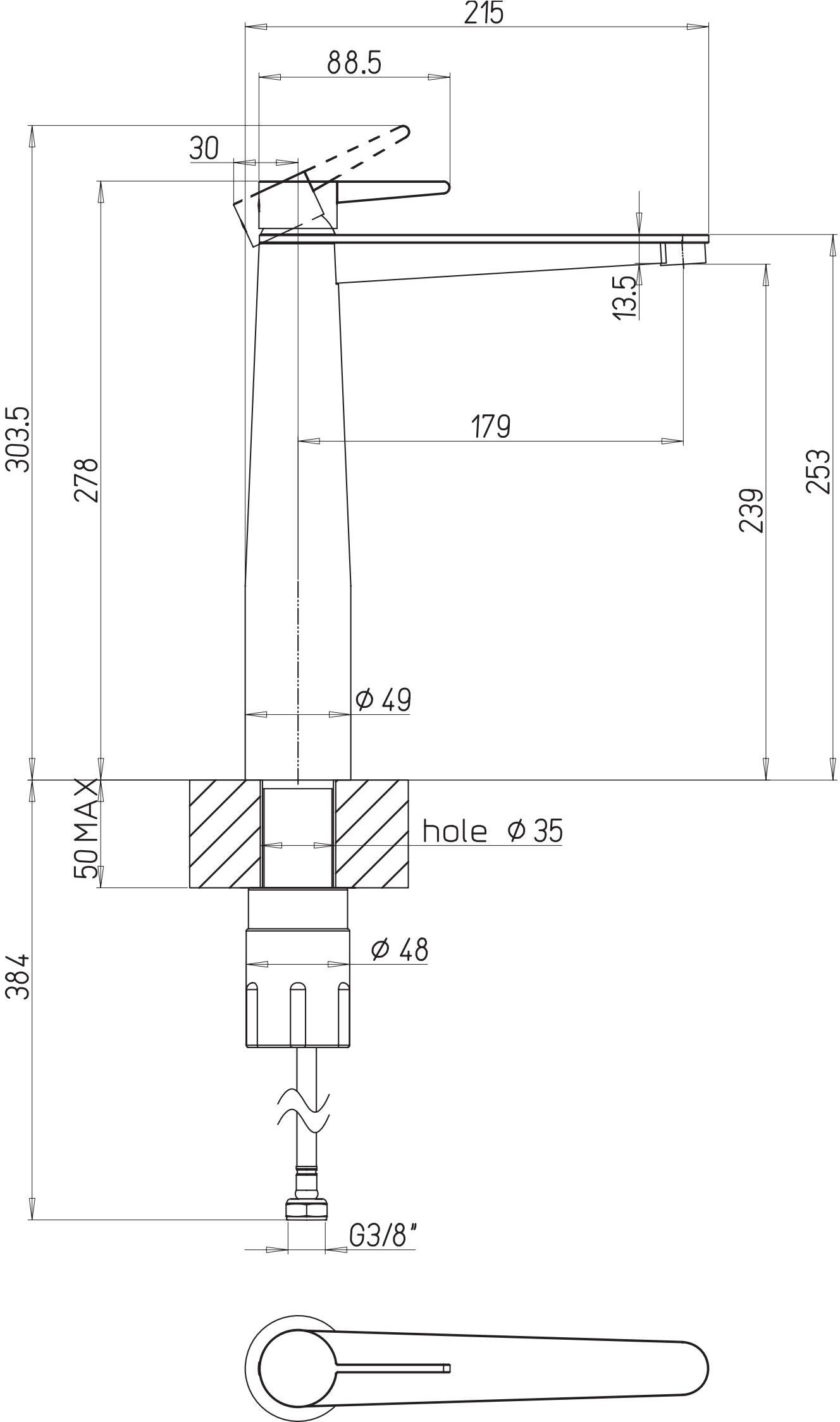
215
88.5
30
13.5
179
303.5
278
239
253
Ø 49
50 MAX
hole Ø 35
384
Ø 48
G3/8"