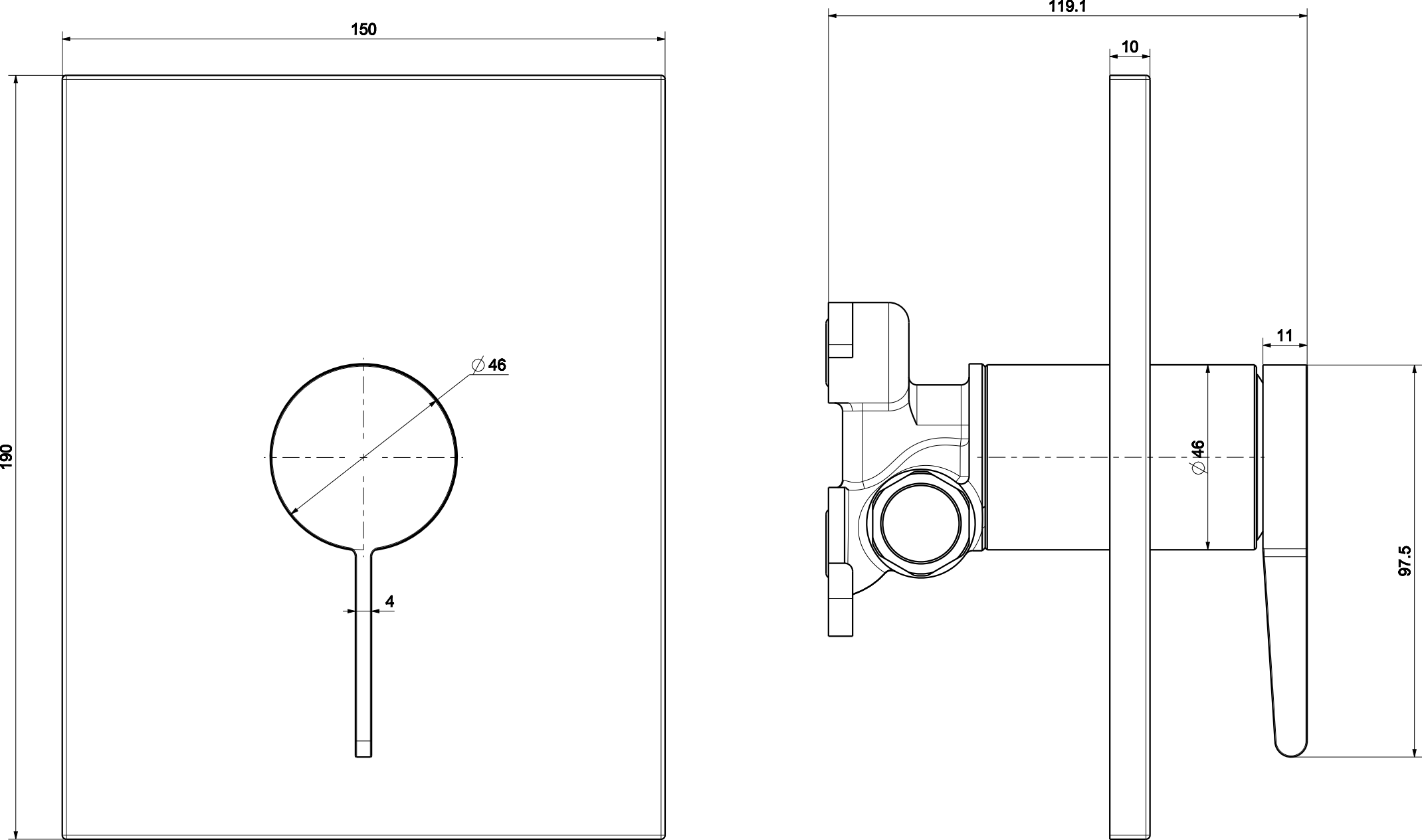
150
190
∅46
4
119.1
10
11
∅46
97.5