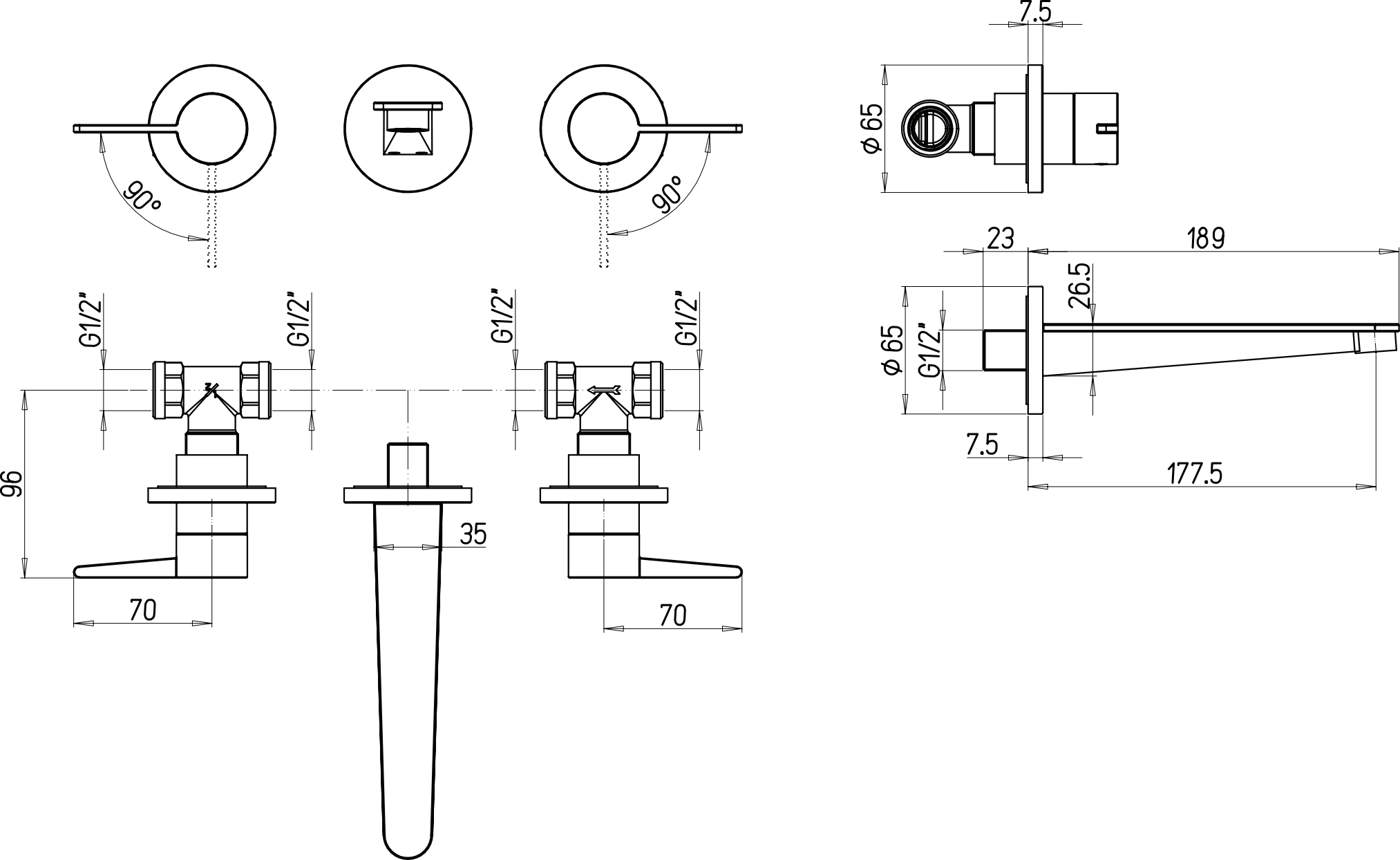
90°
90°
G1/2"
G1/2"
G1/2"
G1/2"
96
35
70
70
7.5
ϕ 65
23
189
26.5
ϕ 65
G1/2"
7.5
177.5