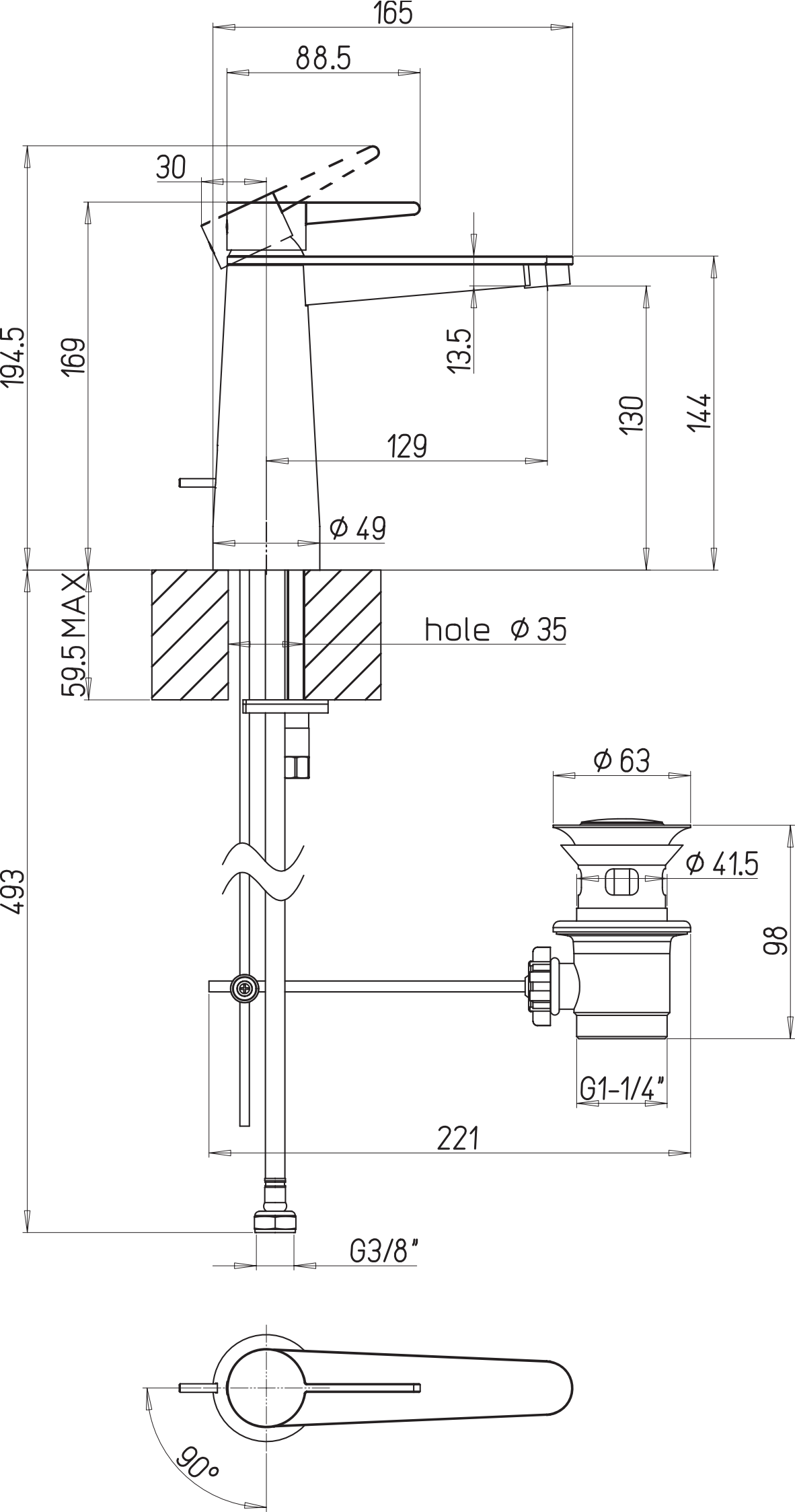
165
88.5
30
194.5
169
13.5
130
144
129
Ø 49
59.5 MAX
hole Ø 35
Ø 63
Ø 41.5
493
98
G1-1/4"
221
G3/8"
90°