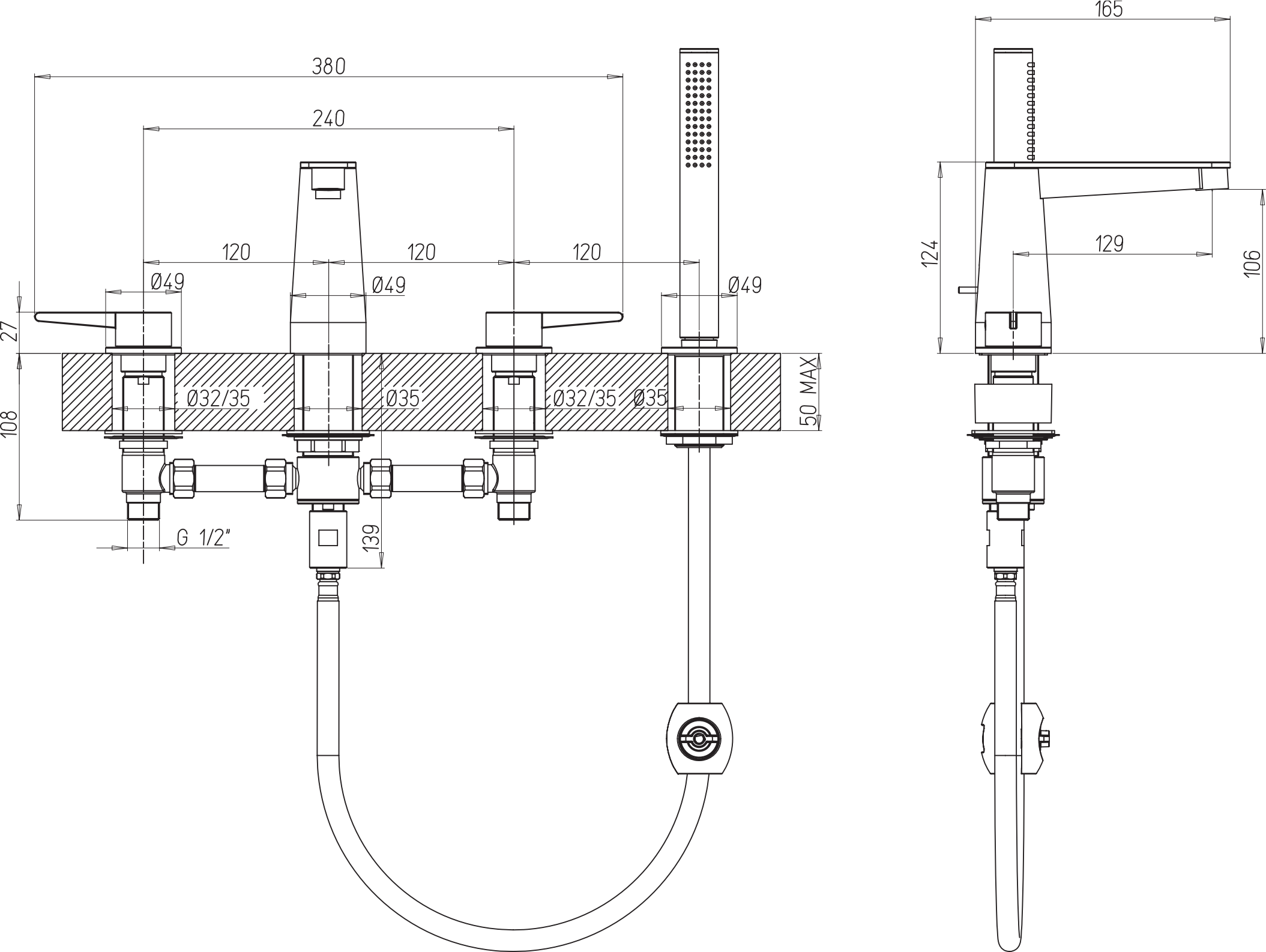
380
240
120
120
120
Ø49
Ø49
Ø49
27
108
Ø32/35
Ø35
Ø32/35
Ø35
50 MAX
G 1/2"
139
165
124
129
106