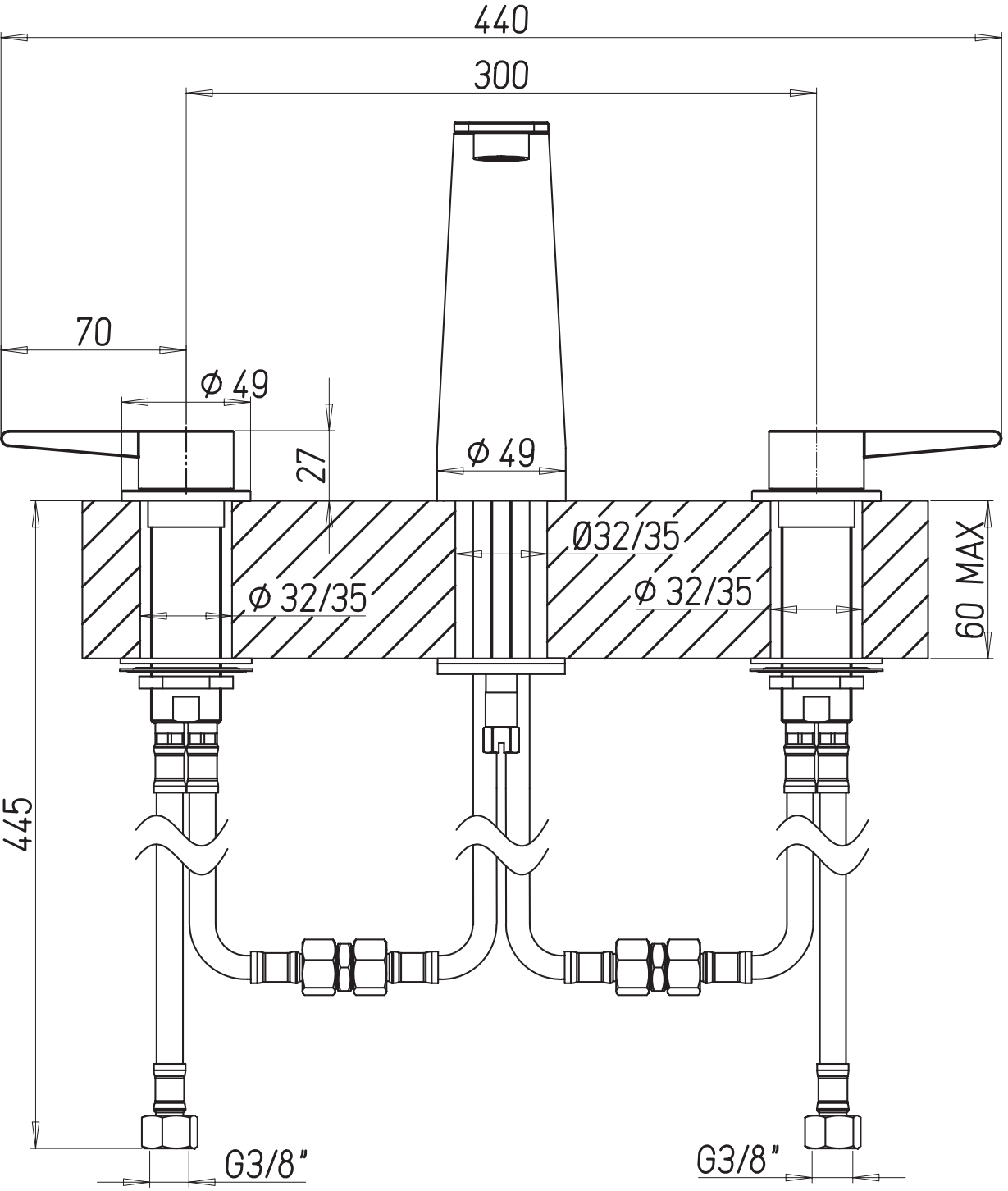
440
300
70
Ø 49
27
Ø 49
Ø32/35
Ø 32/35
Ø 32/35
60 MAX
445
G3/8"
G3/8"

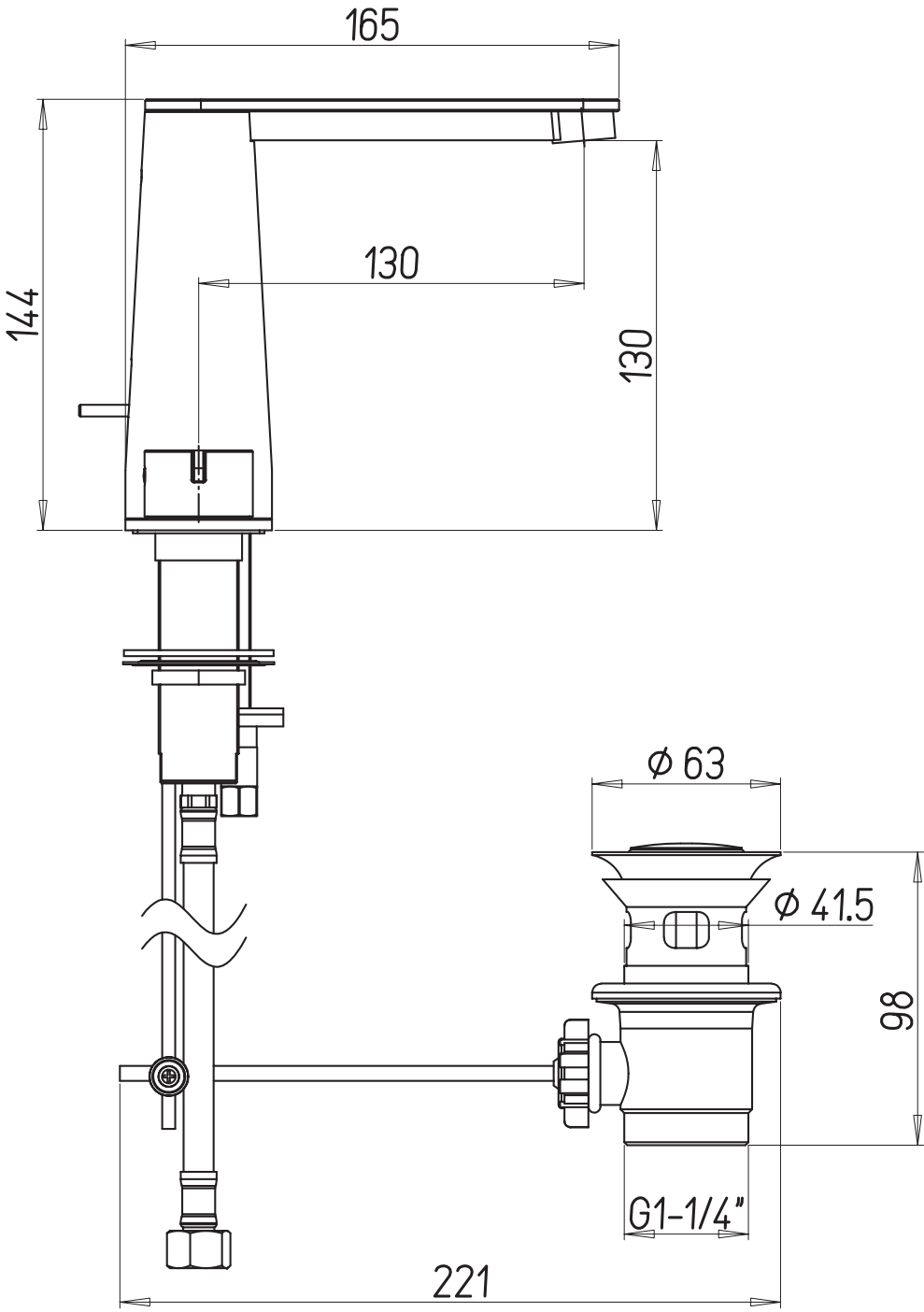
165
130
144
130
Ø 63
Ø 41.5
98
G1-1/4"
221