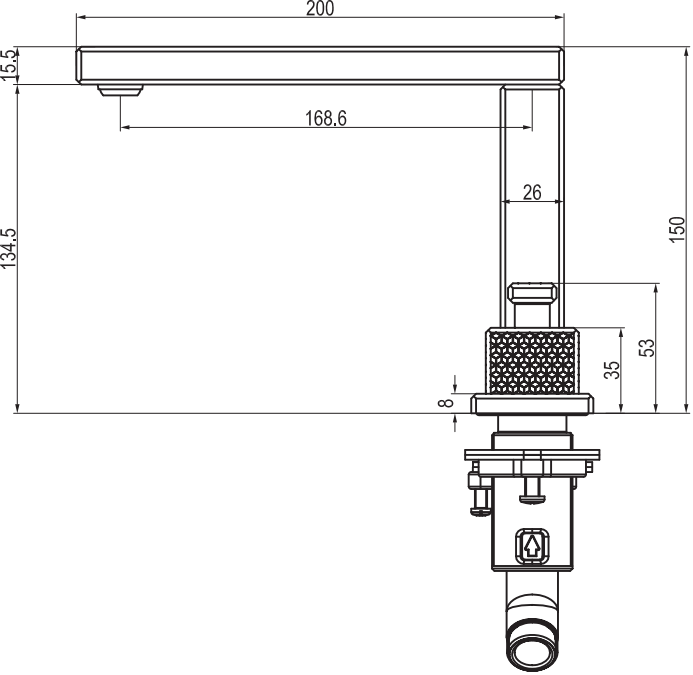
200
15.5
168.6
26
134.5
150
35
53
8

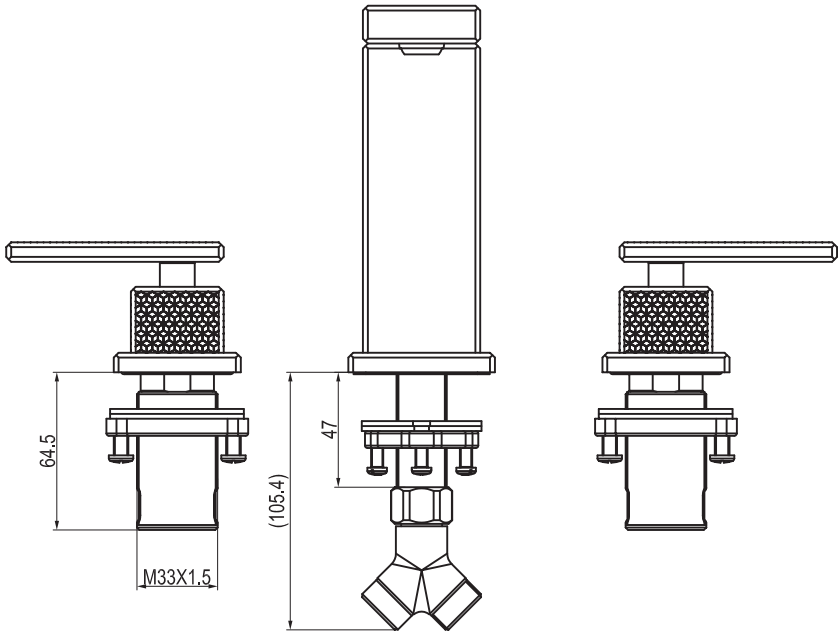
64.5
M33X1.5
47
(105.4)

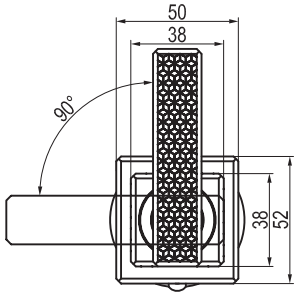
50
38
90°
38
52

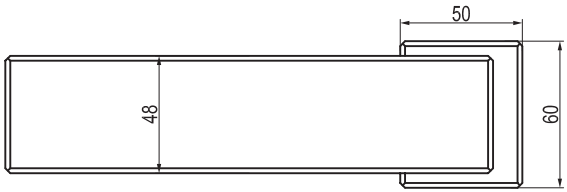
50
48
60

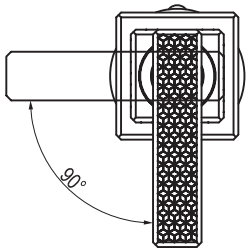
90°